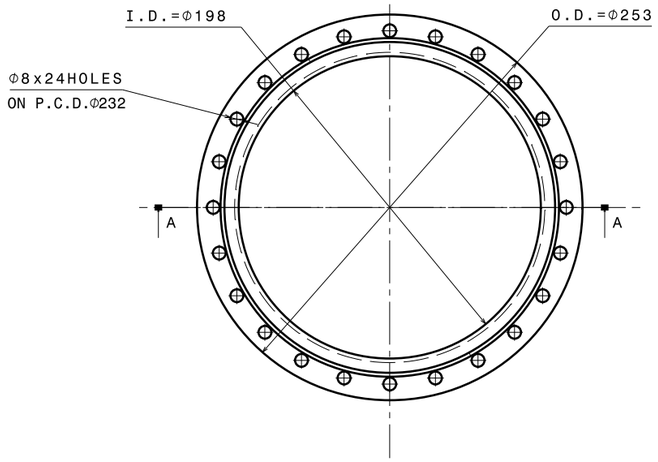

FRONT VIEW

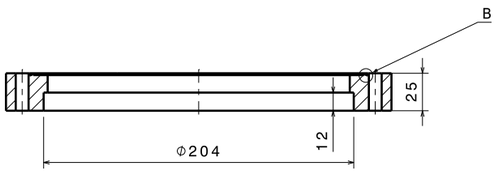

SECTION A-A

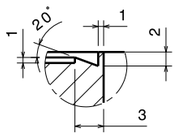

DETAIL VIEW-B
SCALE-3:1

DN 200CF BLANK FLANGE

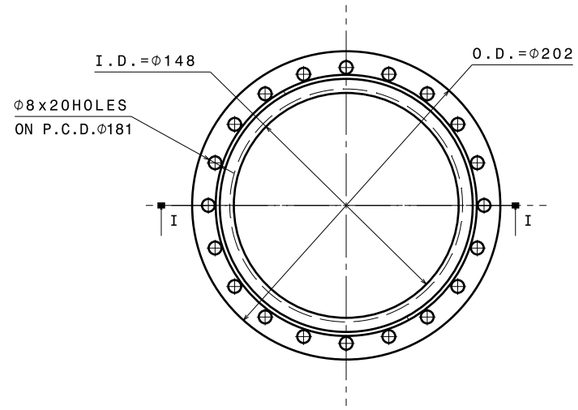

FRONT VIEW

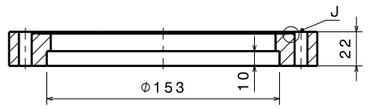

SECTION I-I

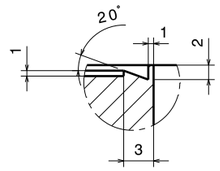

DETAIL VIEW-J
SCALE-3:1

DN 160CF BLANK FLANGE

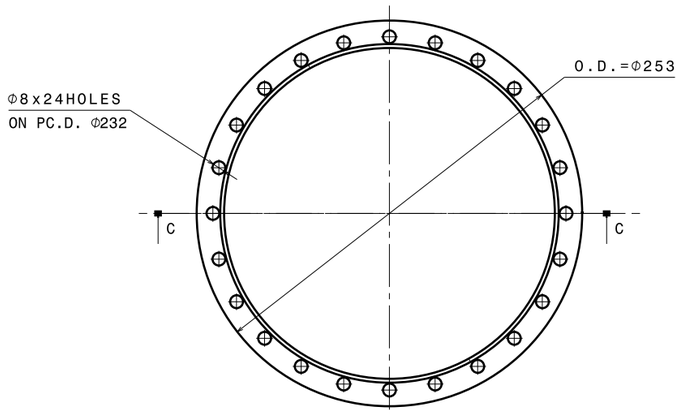

FRONT VIEW

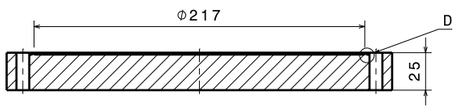

SECTION C-C

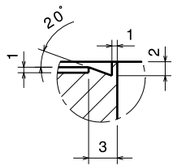

DETAIL VIEW-D
SCALE-3:1

DN 200CF COVER FLANGE

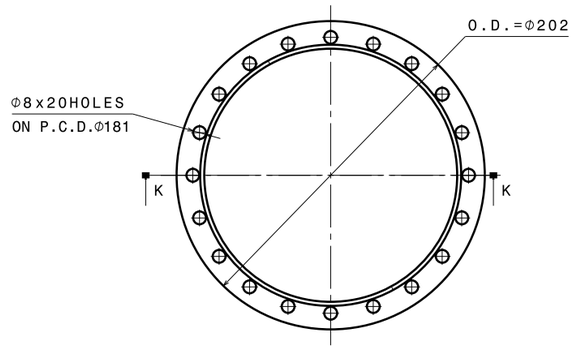

FRONT VIEW

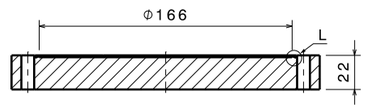

SECTION K-K

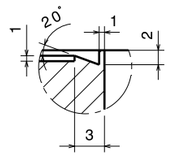

DETAIL VIEW-L
SCALE-3:1

DN 160CF COVER FLANGE

MATERIAL:		8-25	1.6-8	0.025-1.6	< 0.025														
CO-ORDINATED BY																			
MACHINING DEVIATIONS FOR NON-TOLERANCED DIMENSIONS																			
LENGTH IN mm OF SHORTER SIDE OF ANGLES					LENGTH OR DIA	UPTO 6	6-30	30-120	120-315										
UPTO 10	10-50	50-120	OVER 120-400																
±1°	±0°-30'	±0°-20'	±0°-10'			±0.1	±0.2	±0.3	±0.5										

REVISION COLUMN					
REV	ZONE	DESCRIPTION	DATE	REMARKS	APPROVED BY

MED		SIZE A1	
ALL DIMENSIONS ARE IN 'mm' UNLESS OTHERWISE STATED			
SCALE	1:2	DATE	
DRAWN	A.N.N.	04/06/2014	
CHECKED	R.K.		
APPROVED	M.K.G.		

THIRD ANGLE PROJECTION

INSTITUTE FOR PLASMA RESEARCH
(LIGO-INDIA)
BHAT, GANDHINAGAR-382 428.

TITLE: STANDARD FLANGES

REF DRG NO: NA — REV R0

DRG.NO: V001-001-R0 — SHEET 01 OF 05

PDF processed with CutePDF evaluation edition www.CutePDF.com

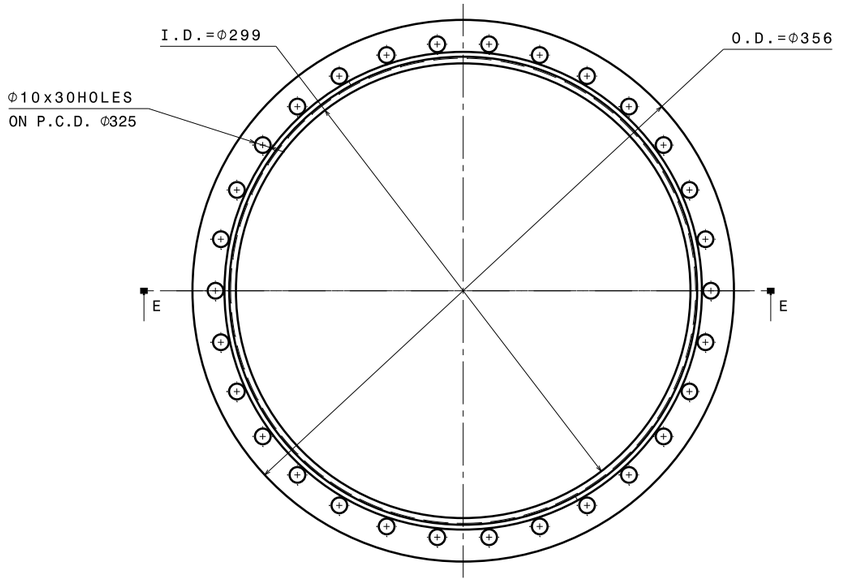

FRONT VIEW

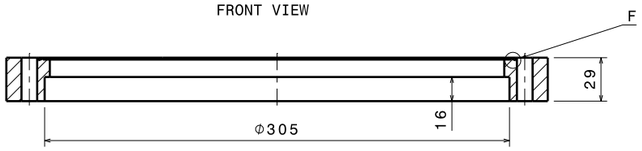

SECTION E-E

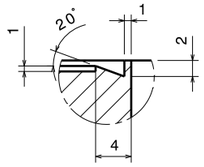

DETAIL VIEW-F
SCALE-3:1

CUSTOM CF BLANK FLANGE (14")
SCALE-1:2

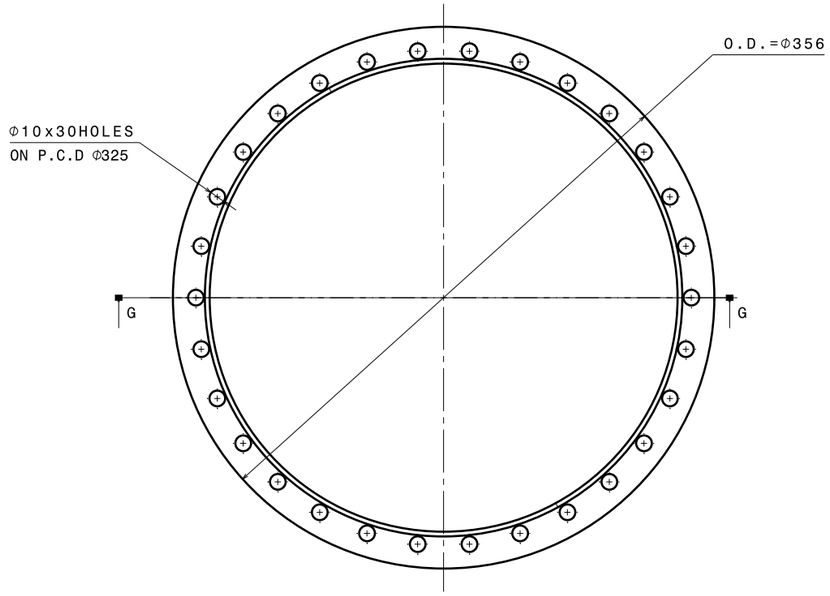

FRONT VIEW

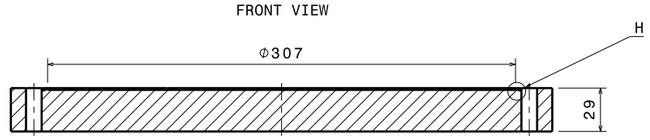

SECTION G-G

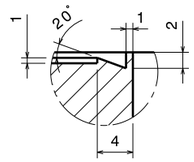

DETAIL VIEW-H
SCALE-3:1

CUSTOM CF COVER FLANGE (14")
SCALE-1:2

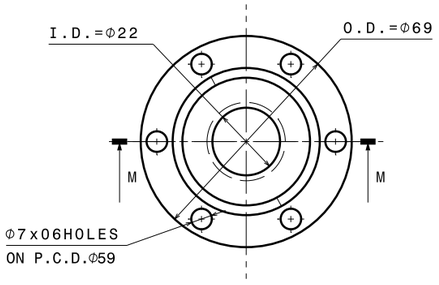

FRONT VIEW

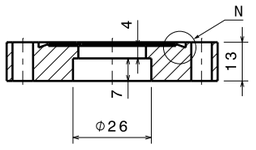

SECTION M-M

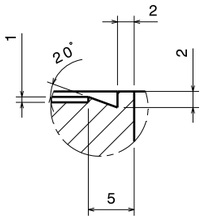

DETAIL VIEW-N
SCALE-3:1

DN 40CF BLANK FLANGE
SCALE-1:1

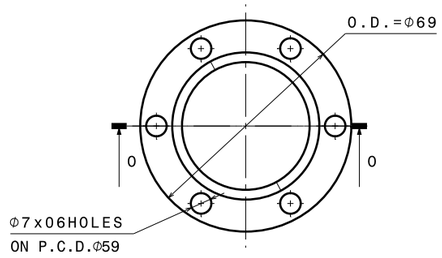

FRONT VIEW

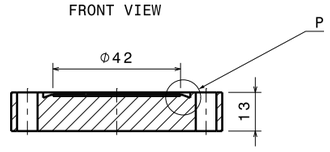

SECTION O-O

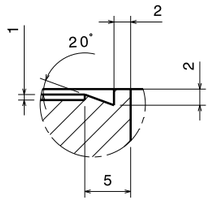

DETAIL VIEW-P
SCALE-3:1

DN 40CF COVER FLANGE
SCALE-1:1

MATERIAL:		▽ 8-25	▽▽ 1.6-8	▽▽▽ 0.025-1.6	▽▽▽▽ < 0.025														
CO-ORDINATED BY																			
MACHINING DEVIATIONS FOR NON-TOLERANCED DIMENSIONS																			
LENGTH IN mm OF SHORTER SIDE OF ANGLES					LENGTH OR DIA	UPTO 6	6-30	30-120	120-315										
UPTO 10	10-50	50-120	OVER 120-400			±0.1	±0.2	±0.3	±0.5										
±1°	±0°-30'	±0°-20'	±0°-10'																

REVISION COLUMN					
REV	ZONE	DESCRIPTION	DATE	REMARKS	APPROVED BY

MED		SIZE A1
ALL DIMENSIONS ARE IN mm UNLESS OTHERWISE STATED		
SCALE	AS NOTED	DATE
DRAWN	A.N.N.	04/06/2016
CHECKED	R.K.	
APPROVED	M.K.G.	

THIRD ANGLE PROJECTION

INSTITUTE FOR PLASMA RESEARCH
(LIGO-INDIA)
BHAT, GANDHINAGAR-382 428.

TITLE: STANDARD FLANGES

REF DRG NO: NA — REV R0

DRG.NO: V001-001-R0 — SHEET 02 OF 05

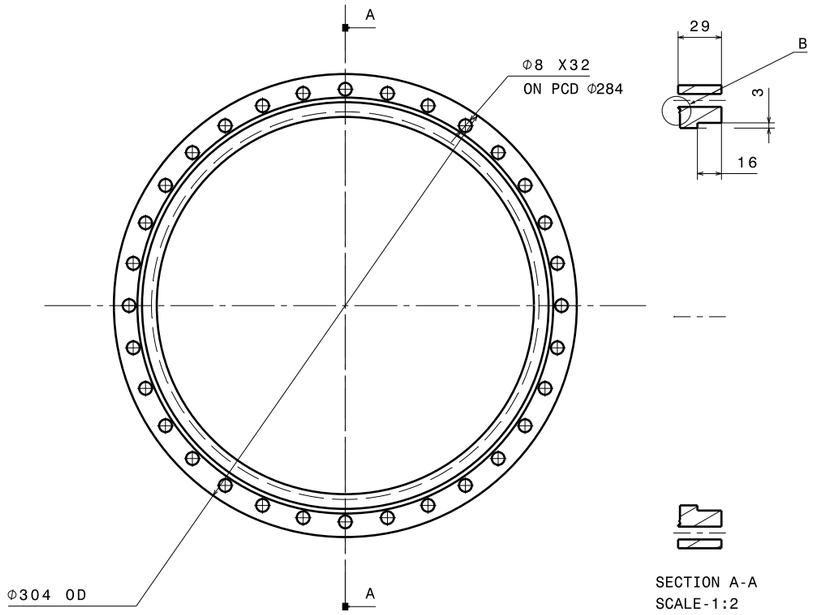

FRONT VIEW

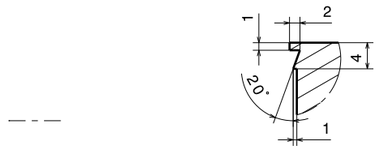

DETAIL VIEW-B
SCALE-2:1

SECTION A-A
SCALE-1:2

DN 250CF BLANK FLANGE
SCALE-1:2

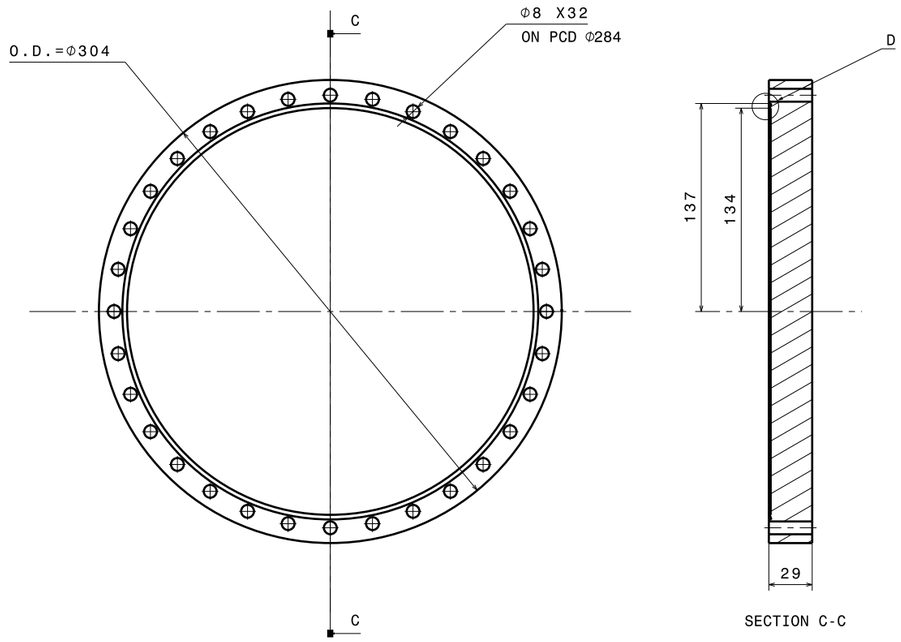

FRONT VIEW

SECTION C-C

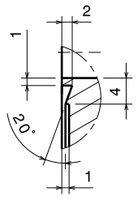

DETAIL VIEW-D
SCALE-2:1

DN 250CF COVER FLANGE
SCALE-1:2

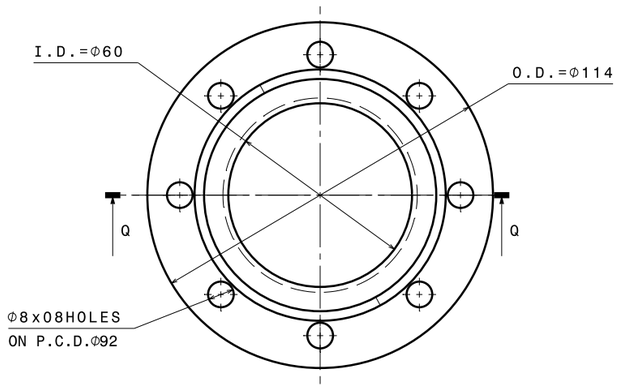

FRONT VIEW

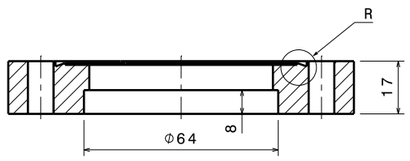

SECTION Q-Q

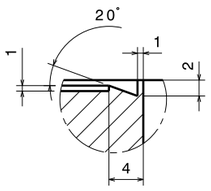

DETAIL VIEW-R
SCALE-3:1

DN 63CF BLANK FLANGE
SCALE-1:1

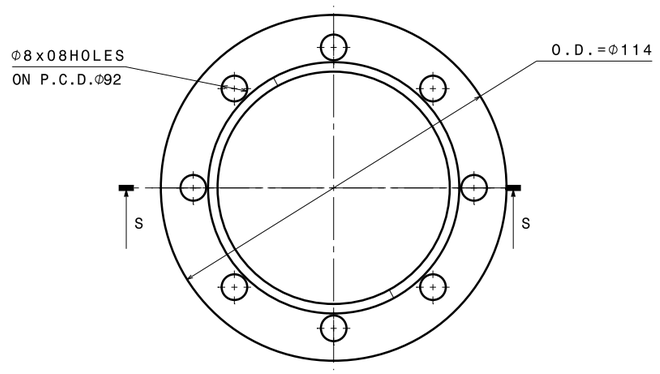

FRONT VIEW

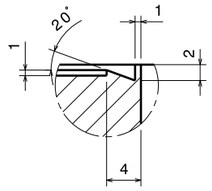

DETAIL VIEW-T
SCALE-3:1

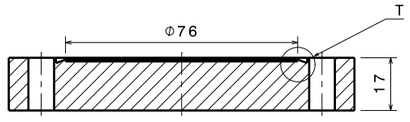

SECTION S-S

DN 63CF COVER FLANGE
SCALE-1:1

MATERIAL:	▽ 8-25	▽▽ 1.6-8	▽▽▽ 0.025-1.6	▽▽▽▽ < 0.025
CO-ORDINATED BY				
MACHINING DEVIATIONS FOR NON-TOLERANCED DIMENSIONS				
LENGTH IN mm OF SHORTER SIDE OF ANGLES				
UPTO 10	10-50	50-120	OVER 120-400	
±1°	±0°-30'	±0°-20'	±0°-10'	

LENGTH OR DIA	UPTO 6	6-30	30-120	120-315
	±0.1	±0.2	±0.3	±0.5

REVISION COLUMN					
REV	ZONE	DESCRIPTION	DATE	REMARKS	APPROVED BY

MED	SIZE A1
ALL DIMENSIONS ARE IN mm UNLESS OTHERWISE STATED	
SCALE	AS NOTED
DRAWN	A.N.N. 04/06/2014
CHECKED	R.K.
APPROVED	M.K.G.

THIRD ANGLE PROJECTION

INSTITUTE FOR PLASMA RESEARCH
(LIGO-INDIA)
BHAT, GANDHINAGAR-382 428.

TITLE: STANDARD FLANGES

REF DRG NO: NA | REV R0

DRG.NO V001-001-R0 | SHEET 03 OF 05

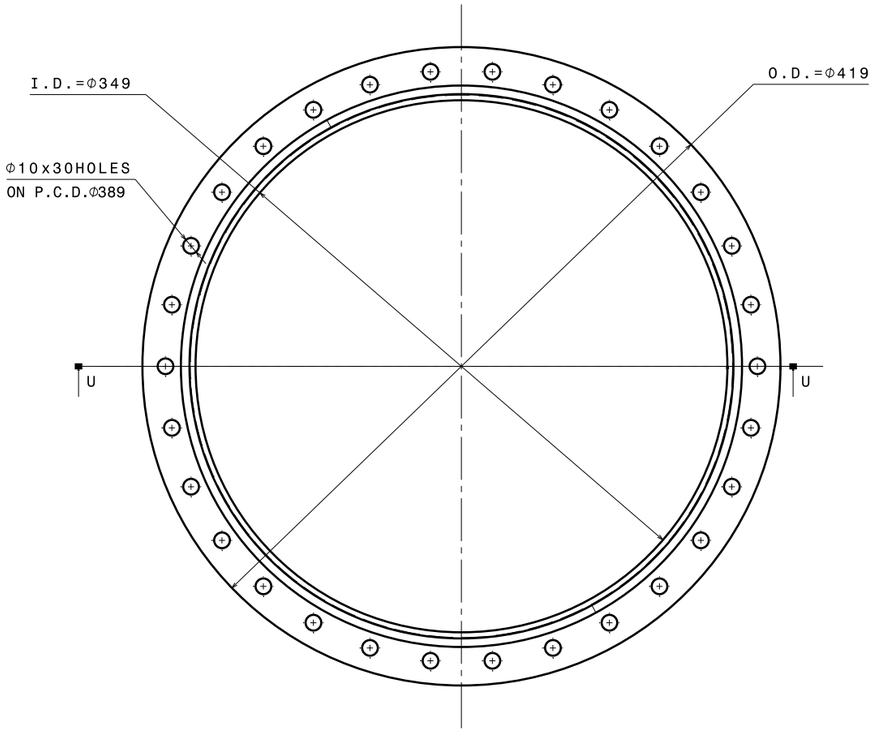

FRONT VIEW

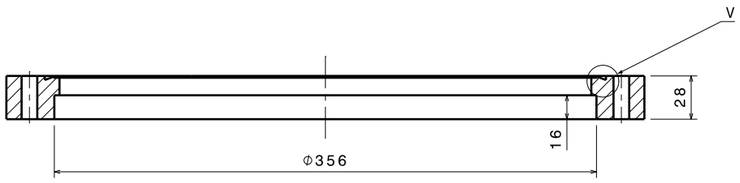

SECTION U-U

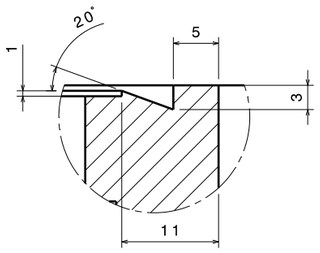

DETAIL VIEW-V
SCALE-3:1

CUSTOM CF BLANK FLANGE (16 1/2")

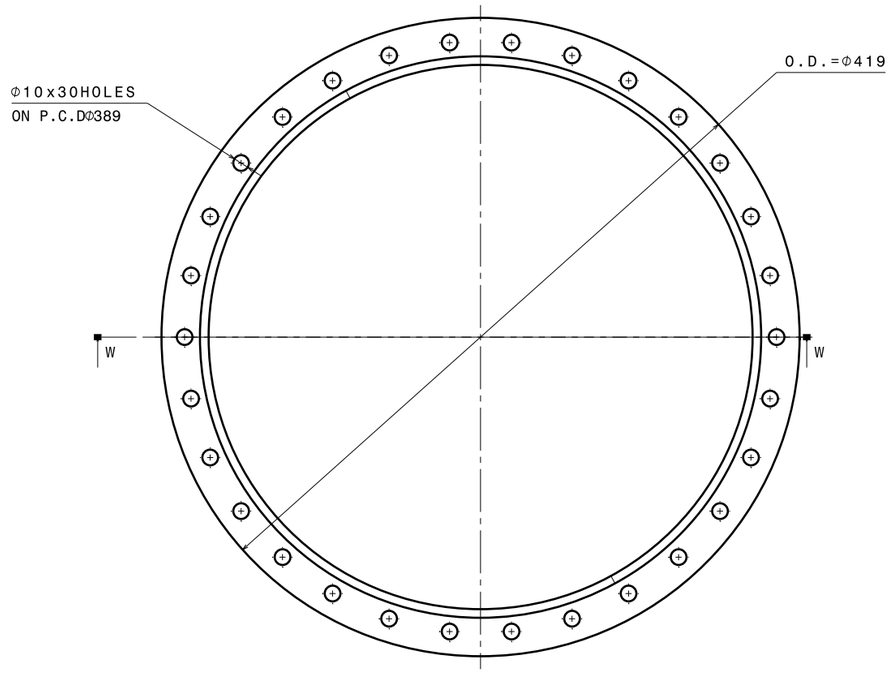

FRONT VIEW

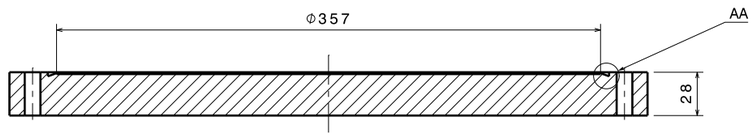

SECTION W-W

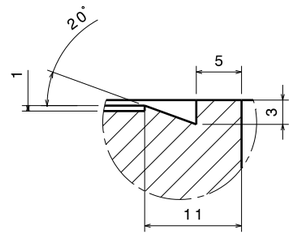

DETAIL VIEW-AA
SCALE-3:1

CUSTOM CF COVER FLANGE (16 1/2")

MATERIAL:	▽ 8-25	▽▽ 1.6-8	▽▽▽ 0.025-1.6	▽▽▽▽ < 0.025
CO-ORDINATED BY				

MACHINING DEVIATIONS FOR NON-TOLERANCED DIMENSIONS

LENGTH IN mm OF SHORTER SIDE OF ANGLES				LENGTH OR DIA	UPTO 6	6-30	30-120	120-315
UPTO 10	10-50	50-120	OVER 120-400					
±1°	±0°-30'	±0°-20'	±0°-10'		±0.1	±0.2	±0.3	±0.5

REV	ZONE	DESCRIPTION	DATE	REMARKS	APPROVED BY

MED		SIZE A1	
ALL DIMENSIONS ARE IN mm UNLESS OTHERWISE STATED			
SCALE	1:2	DATE	
DRAWN	A.N.N.	04/06/2014	
CHECKED	R.K.		
APPROVED	M.K.G.		

THIRD ANGLE PROJECTION

INSTITUTE FOR PLASMA RESEARCH
(LIGO-INDIA)
BHAT, GANDHINAGAR-382 428.

TITLE: STANDARD FLANGES

REF DRG NO: NA | REV R0

DRG.NO V001-001-R0 | SHEET 04 OF 05

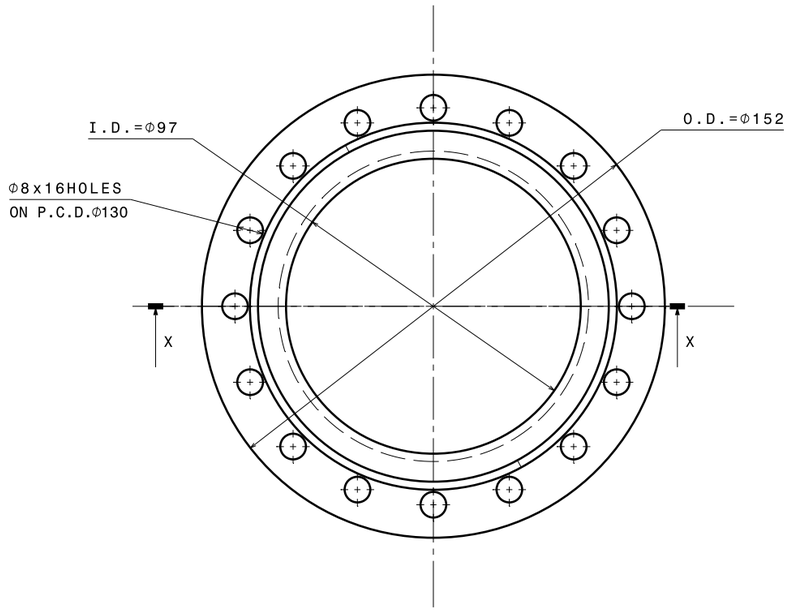

FRONT VIEW

SECTION X-X

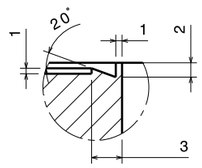

DETAIL VIEW-Y
SCALE-3:1

DN 100CF BLANK FLANGE

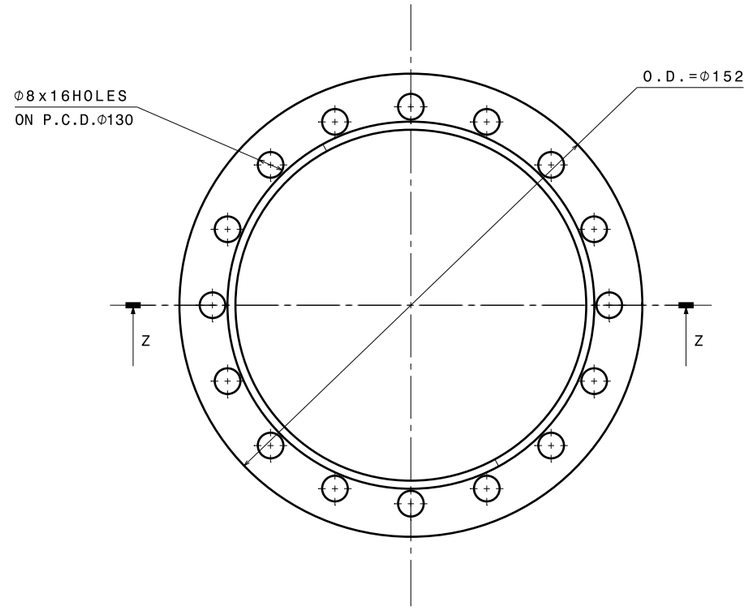

FRONT VIEW

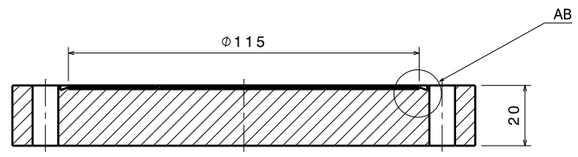

SECTION Z-Z

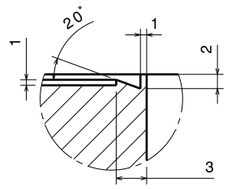

DETAIL VIEW-AB
SCALE-3:1

DN 100CF COVER FLANGE

MATERIAL:		8-25	1.6-8	0.025-1.6	< 0.025														
CO-ORDINATED BY																			
MACHINING DEVIATIONS FOR NON-TOLERANCED DIMENSIONS																			
LENGTH IN mm OF SHORTER SIDE OF ANGLES				LENGTH OR DIA	UPTO 6	6-30	30-120	120-315											
UPTO 10	10-50	50-120	OVER 120-400																
±1°	±0°-30'	±0°-20'	±0°-10'		±0.1	±0.2	±0.3	±0.5											

REVISION COLUMN					
REV	ZONE	DESCRIPTION	DATE	REMARKS	APPROVED BY

MED		SIZE A1	
ALL DIMENSIONS ARE IN 'mm' UNLESS OTHERWISE STATED			
SCALE	1:1	DATE	
DRAWN	A.N.N.	04/06/2014	
CHECKED	R.K.		
APPROVED	M.K.G.		

THIRD ANGLE PROJECTION

INSTITUTE FOR PLASMA RESEARCH
(LIGO-INDIA)
BHAT, GANDHINAGAR-382 428.

TITLE
STANDARD FLANGES

REF DRG NO: NA — REV R0

DRG.NO V001-001-R0 — SHEET 05 OF 05

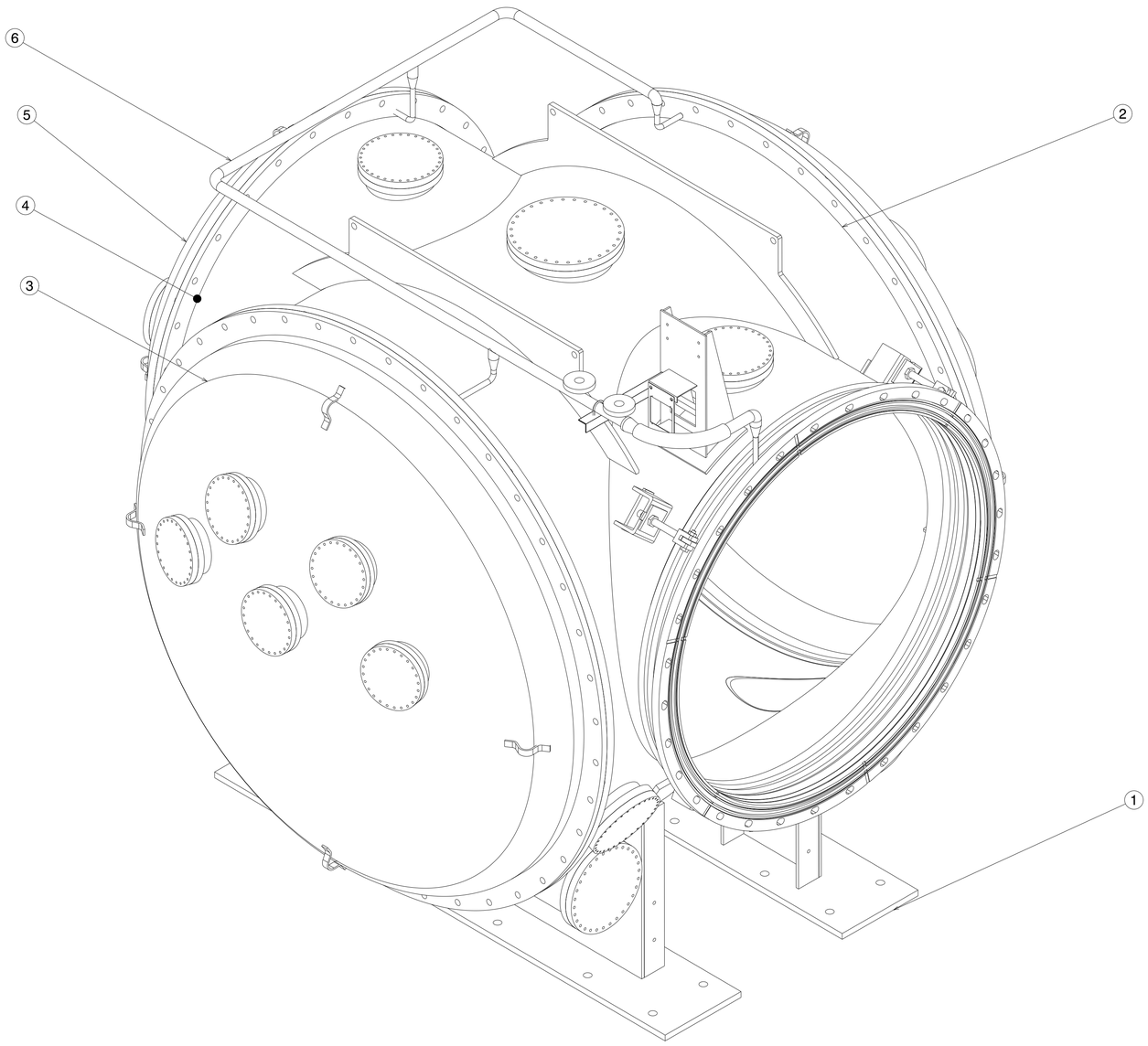

HORIZONTAL ACCESS MODULE

PART NO.	QUANTITY	PART NAME	MATERIAL	REF. DWG. NO.	REMARK
6	01	ANNULUS TUBING ASSEMBLY	SS304L	VH01-007-R1	-
5	01	END COVER SMALL	SS304L	VH01-006-R1	-
4	01	CYLINDRICAL PART (DIA 60.5"ID)	SS304L	VH01-005-R1	-
3	02	END COVER BIG	SS304L	VH01-004-R1	-
2	01	CYLINDRICAL PART (DIA 84.25"ID)	SS304L	VH01-003-R1	-
1	02	VESSEL SUPPORT	CARBON STEEL	VH01-002-R1	-

MATERIAL: ▽ 8-25 | ▽▽ 1.6-8 | ▽▽▽ 0.025-1.6 | ▽▽▽▽ < 0.025

CO-ORDINATED BY

MACHINING DEVIATIONS FOR NON-TOLERANCED DIMENSIONS

LENGTH IN mm OF SHORTER SIDE OF ANGLES				LENGTH OR DIA	UPTO 6	6-30	30-120	120-315
UPTO 10	10-50	50-120	OVER 120-400					
±1'	±0°-30'	±0°-20'	±0°-10'		±0.1	±0.2	±0.3	±0.5

REV	ZONE	DESCRIPTION	DATE	REMARKS	APPROVED BY

REVISION COLUMN

MED | SIZE A1

ALL DIMENSIONS ARE IN 'mm' UNLESS OTHERWISE STATED

INSTITUTE FOR PLASMA RESEARCH (LIGO-INDIA) BHAT, GANDHINAGAR-382 428.

SCALE	1:10	DATE	
DRAWN	A.N.N.	26/07/2015	
CHECKED	R.K.		
APPROVED	M.K.G.		

THIRD ANGLE PROJECTION

TITLE: HORIZONTAL ACCESS MODULE

REF DRG NO: NA | REV R1

DRG.NO VH01-001-R1 | SHEET 01 OF 03

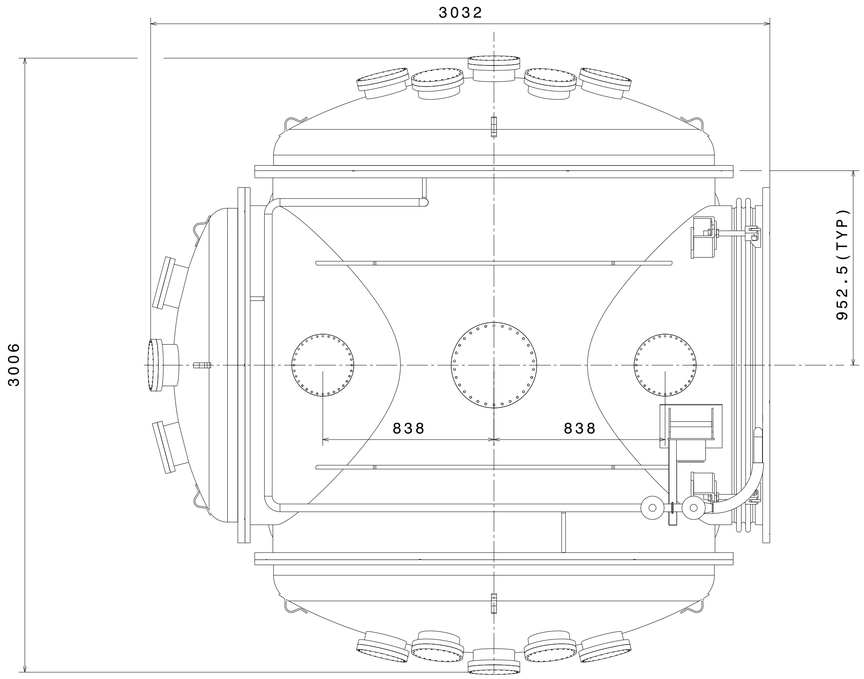

TOP VIEW

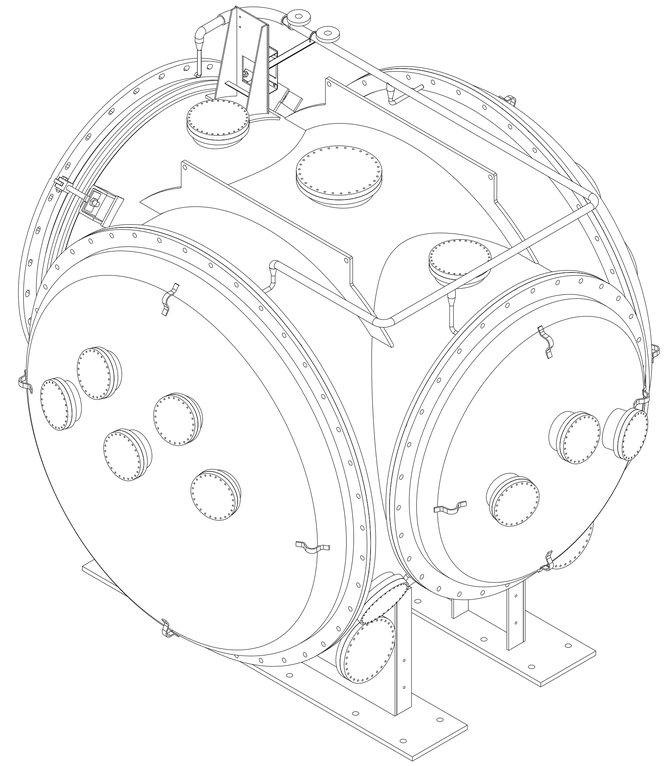

ISOMETRIC VIEW

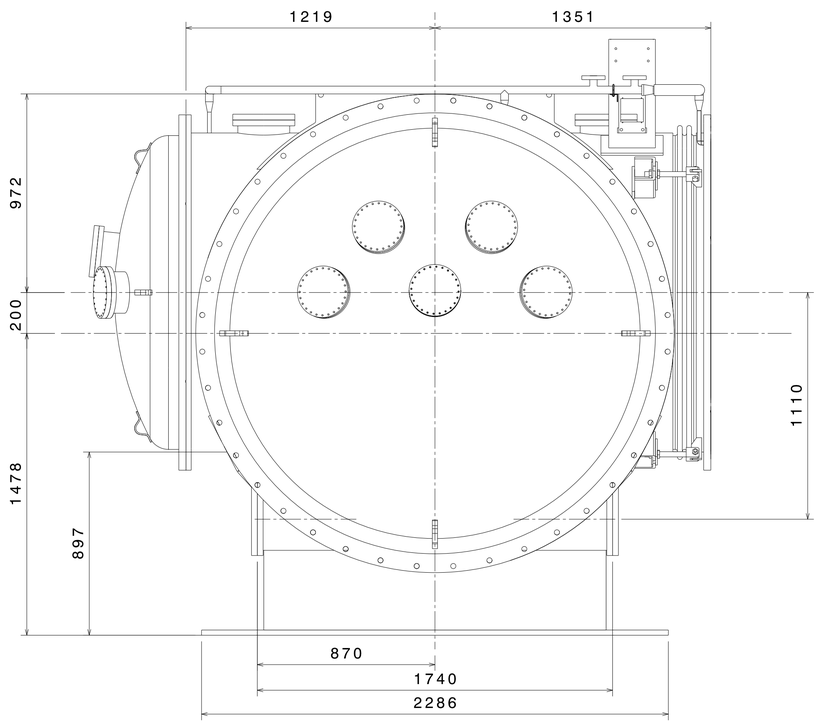

FRONT VIEW

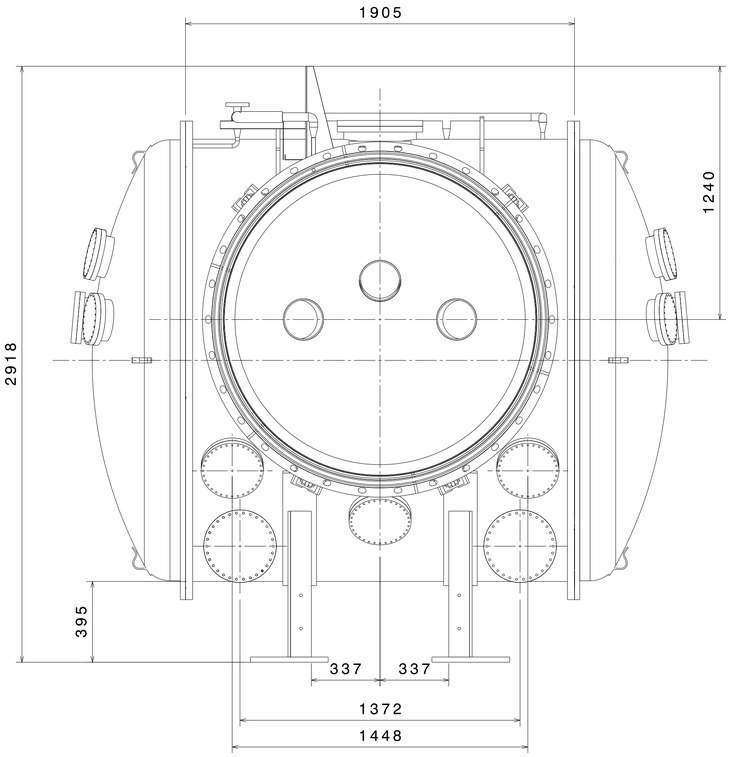

SIDE VIEW

HORIZONTAL ACCESS MODULE

MATERIAL:	▽ 8-25	▽▽ 1.6-8	▽▽▽ 0.025-1.6	▽▽▽▽ < 0.025
CO-ORDINATED BY				

MACHINING DEVIATIONS FOR NON-TOLERANCED DIMENSIONS

LENGTH IN mm OF SHORTER SIDE OF ANGLES				LENGTH OR DIA	UPTO 6	6-30	30-120	120-315
UPTO 10	10-50	50-120	OVER 120-400					
±1'	±0°-30'	±0°-20'	±0°-10'		±0.1	±0.2	±0.3	±0.5

REVISION COLUMN

REV	ZONE	DESCRIPTION	DATE	REMARKS	APPROVED BY

MED	SIZE A1
ALL DIMENSIONS ARE IN 'mm' UNLESS OTHERWISE STATED	
SCALE 1:15	DATE
DRAWN A.N.N.	26/07/2015
CHECKED R.K.	
APPROVED M.K.G.	

THIRD ANGLE PROJECTION

INSTITUTE FOR PLASMA RESEARCH
(LIGO-INDIA)
BHAT, GANDHINAGAR-382 428.

TITLE
HORIZONTAL ACCESS MODULE

REF DRG NO: NA

REV R1

DRG.NO VH01-001-R1

SHEET 02 OF 03

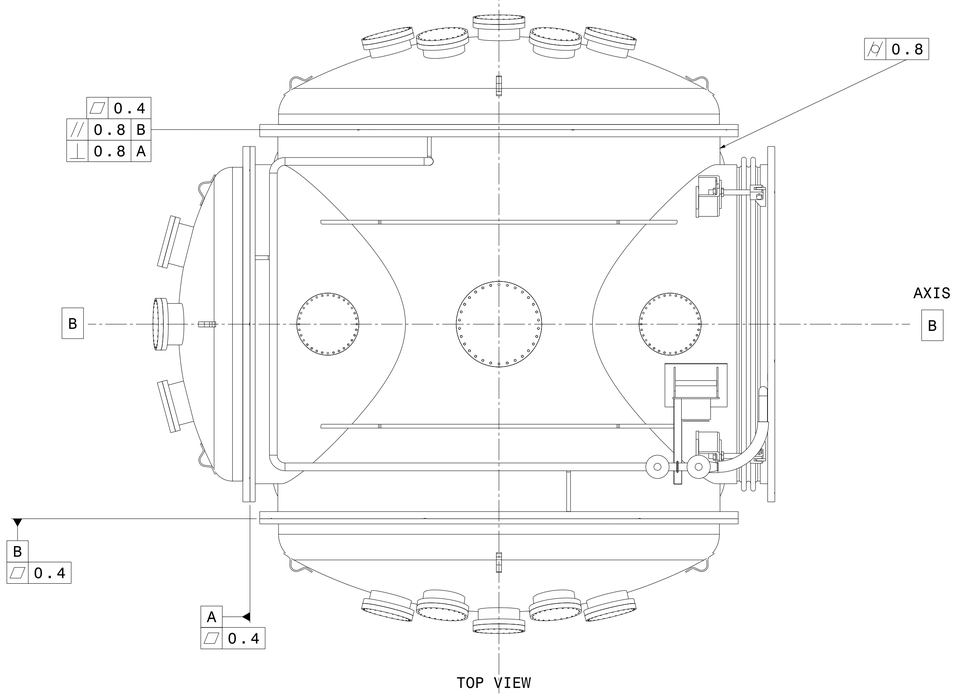

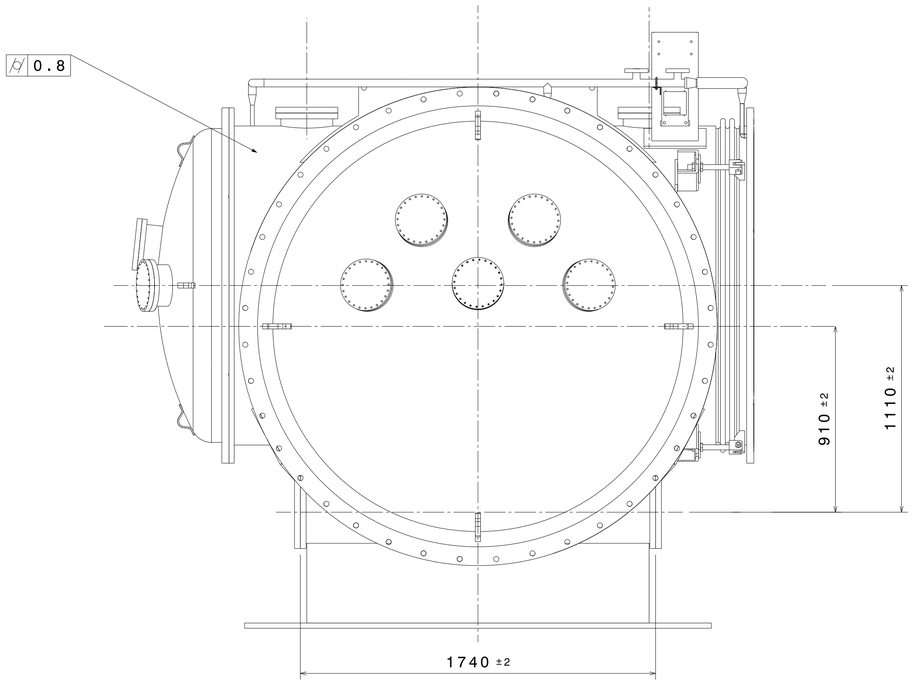

FRONT VIEW

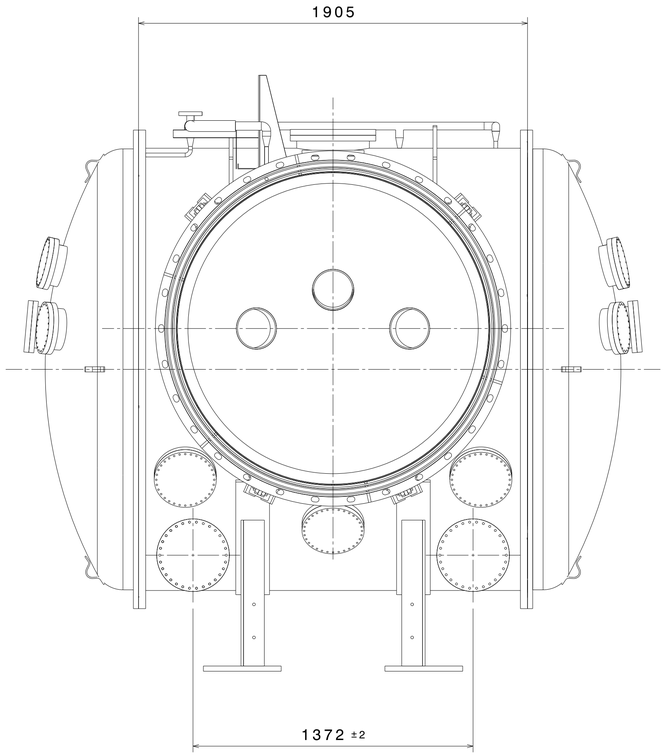

SIDE VIEW

HORIZONTAL ACCESS MODULE

MATERIAL:		▽ 8-25		▽▽ 1.6-8		▽▽▽ 0.025-1.6		▽▽▽▽ < 0.025		REVISION COLUMN						MED	SIZE A1	INSTITUTE FOR PLASMA RESEARCH (LIGO-INDIA) BHAT, GANDHINAGAR-382 428.	
CO-ORDINATED BY										REV	ZONE	DESCRIPTION	DATE	REMARKS	APPROVED BY	ALL DIMENSIONS ARE IN 'mm' UNLESS OTHERWISE STATED			
MACHINING DEVIATIONS FOR NON-TOLERANCED DIMENSIONS																SCALE	1:10	DATE	TITLE HORIZONTAL ACCESS MODULE
LENGTH IN mm OF SHORTER SIDE OF ANGLES					LENGTH OR DIA	UPTO 6	6-30	30-120	120-315							DRAWN	A.N.N.	26/07/2015	THIRD ANGLE PROJECTION
UPTO 10	10-50	50-120	OVER 120-400													CHECKED	R.K.		REF DRG NO: NA / REV R1
±1'	±0°-30'	±0°-20'	±0°-10'			±0.1	±0.2	±0.3	±0.5							APPROVED	M.K.G.		DRG.NO VH01-001-R1 / SHEET 03 OF 03

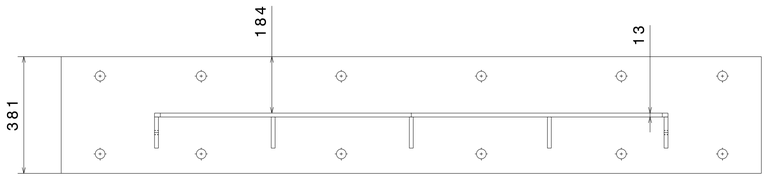

TOP VIEW

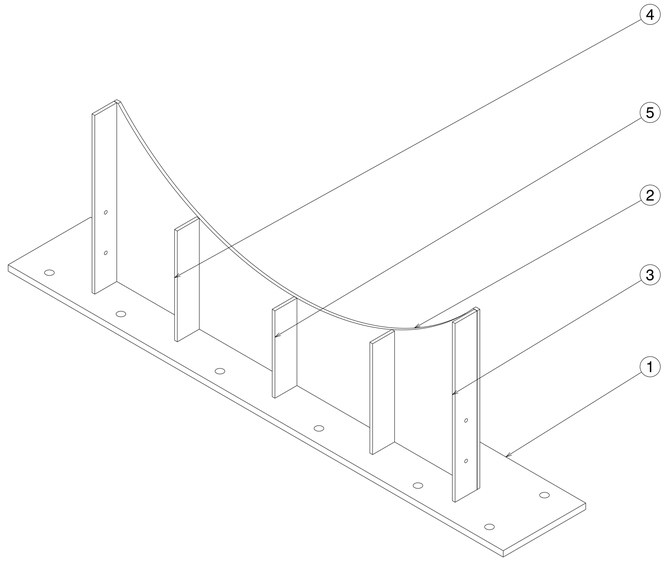

ISOMETRIC VIEW

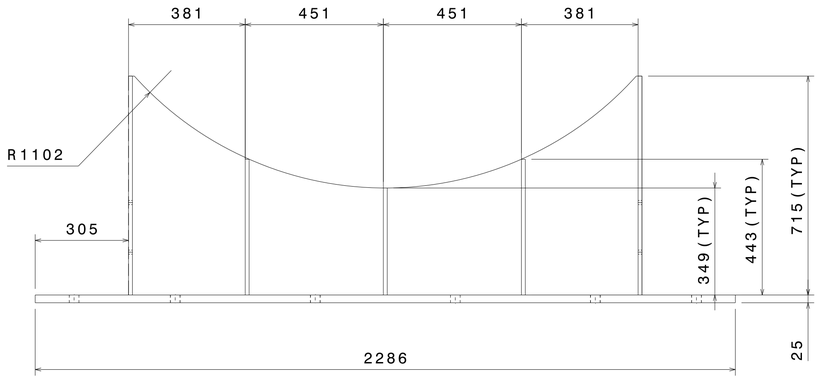

FRONT VIEW

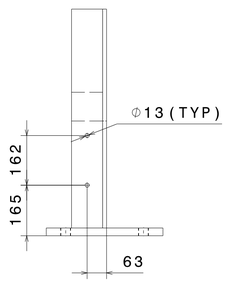

SIDE VIEW

1 VESSEL SUPPORT

PART NO.	QUANTITY	PART NAME	MATERIAL	REF. DWG. NO.	REMARK
5	01	RECTANGULAR PLATE-3	CARBON STEEL	VH01-002-R1/SHEET 02	-
4	02	RECTANGULAR PLATE-2	CARBON STEEL	VH01-002-R1/SHEET 02	-
3	02	RECTANGULAR PLATE-1	CARBON STEEL	VH01-002-R1/SHEET 02	-
2	01	RECTANGULAR PLATE (CIRCULAR CUTTED SECTION)	CARBON STEEL	VH01-002-R1/SHEET 02	-
1	01	BASE PLATE	CARBON STEEL	VH01-002-R1/SHEET 02	-

MATERIAL:	▽ 8-25	▽▽ 1.6-8	▽▽▽ 0.025-1.6	▽▽▽▽ < 0.025
CO-ORDINATED BY				

MACHINING DEVIATIONS FOR NON-TOLERANCED DIMENSIONS

LENGTH IN mm OF SHORTER SIDE OF ANGLES				LENGTH OR DIA	UPTO 6	6-30	30-120	120-315
UPTO 10	10-50	50-120	OVER 120-400					
±1°	±0°-30'	±0°-20'	±0°-10'		±0.1	±0.2	±0.3	±0.5

REVISION COLUMN					
REV	ZONE	DESCRIPTION	DATE	REMARKS	APPROVED BY

MED		SIZE A1
ALL DIMENSIONS ARE IN 'mm' UNLESS OTHERWISE STATED		
SCALE	1:10	DATE
DRAWN	A.N.N.	26/07/2015
CHECKED	R.K.	
APPROVED	M.K.G.	

THIRD ANGLE PROJECTION

INSTITUTE FOR PLASMA RESEARCH
(LIGO-INDIA)
BHAT, GANDHINAGAR-382 428.

TITLE VESSEL SUPPORT

REF DRG NO: VH01-001-R1 REV R1

DRG.NO VH01-002-R1 SHEET 01 OF 02

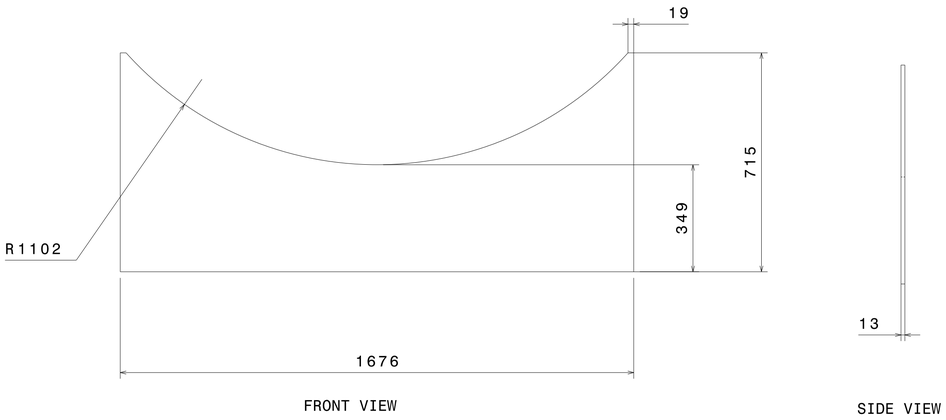

2 RECTANGULAR PLATE (CIRCULAR CUTTED SECTION)
SCALE-1:10

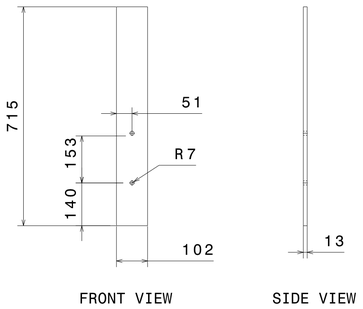

3 RECTANGULAR PLATE-1
SCALE-1:10

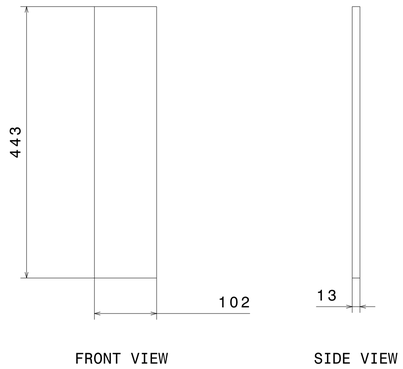

4 RECTANGULAR PLATE-2
SCALE-1:5

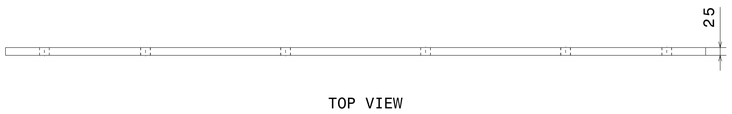

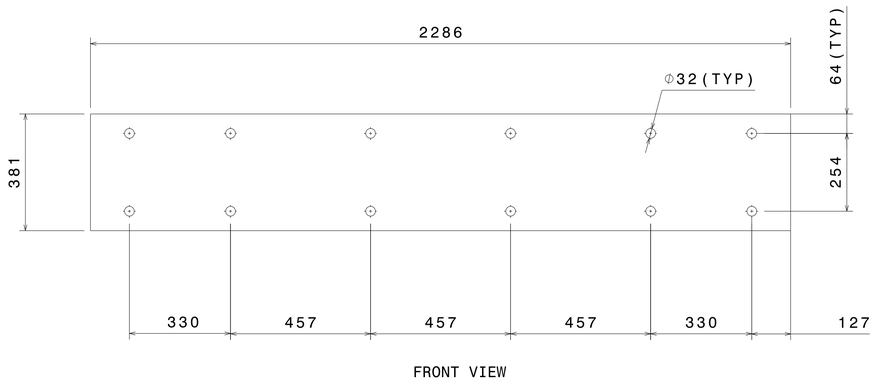

1 BASE PLATE
SCALE-1:10

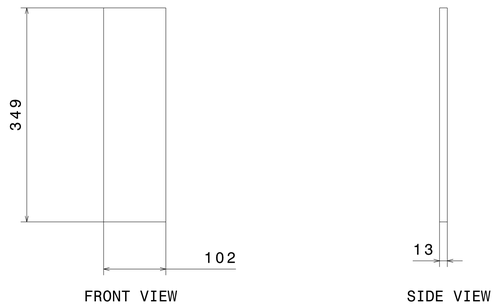

5 RECTANGULAR PLATE-3
SCALE-1:5

MATERIAL:		▽ 8-25	▽▽ 1.6-8	▽▽▽ 0.025-1.6	▽▽▽▽ < 0.025			REVISION COLUMN						MED	SIZE A1	INSTITUTE FOR PLASMA RESEARCH (LIGO-INDIA) BHAT, GANDHINAGAR-382 428.	
CO-ORDINATED BY								REV	ZONE	DESCRIPTION	DATE	REMARKS	APPROVED BY	ALL DIMENSIONS ARE IN 'mm' UNLESS OTHERWISE STATED			
MACHINING DEVIATIONS FOR NON-TOLERANCED DIMENSIONS														SCALE	AS NOTED	DATE	TITLE VESSEL SUPPORT
LENGTH IN mm OF SHORTER SIDE OF ANGLES				LENGTH OR DIA	UPTO 6	6-30	30-120	120-315						DRAWN	A.N.N.	26/07/2015	THIRD ANGLE PROJECTION
UPTO 10	10-50	50-120	OVER 120-400											CHECKED	R.K.		REF DRG NO: VH01-001-R1 REV R1
±1'	±0°-30'	±0°-20'	±0°-10'		±0.1	±0.2	±0.3	±0.5						APPROVED	M.K.G.		DRG.NO VH01-002-R1 SHEET 02 OF 02

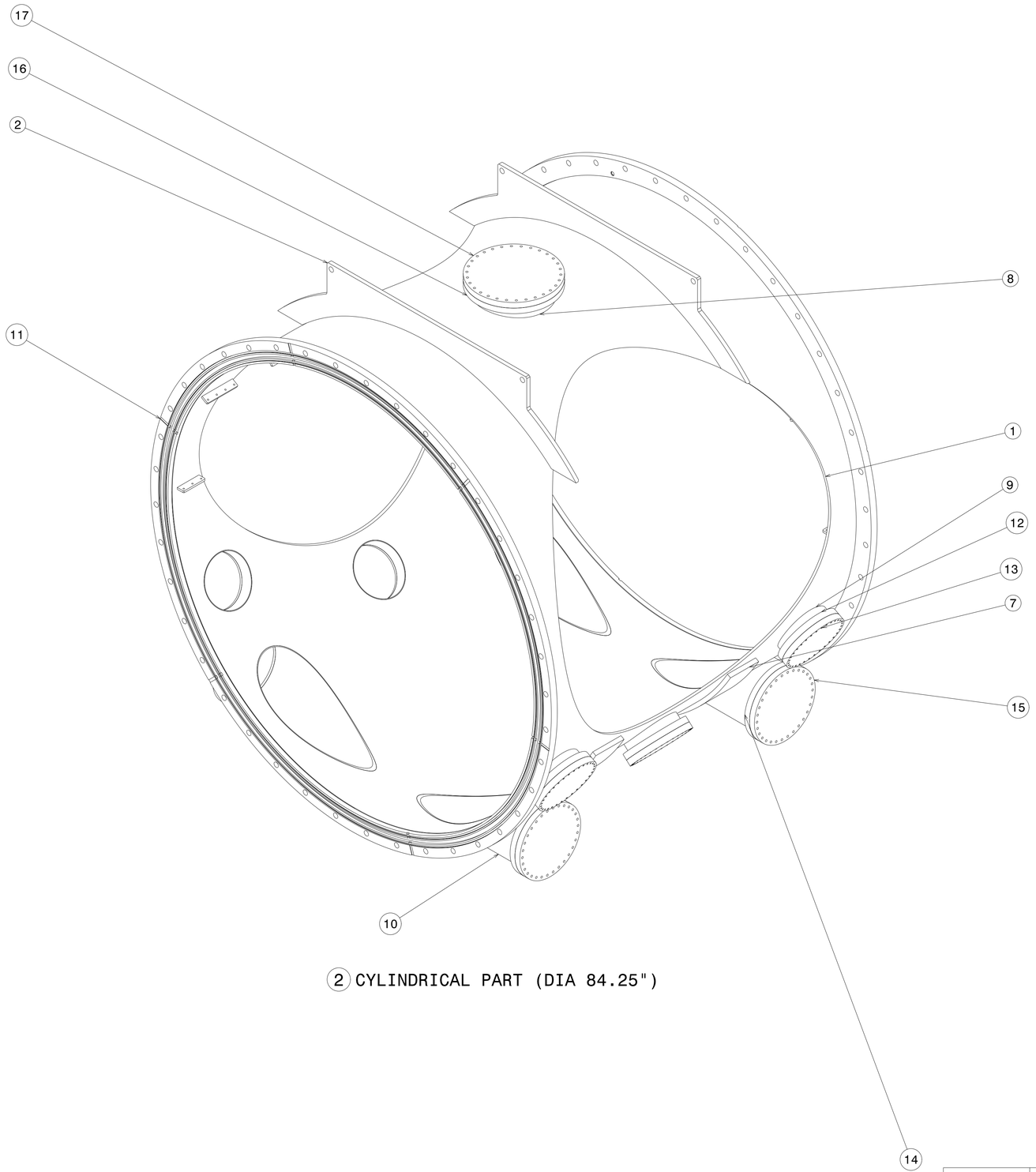

2 CYLINDRICAL PART (DIA 84.25")

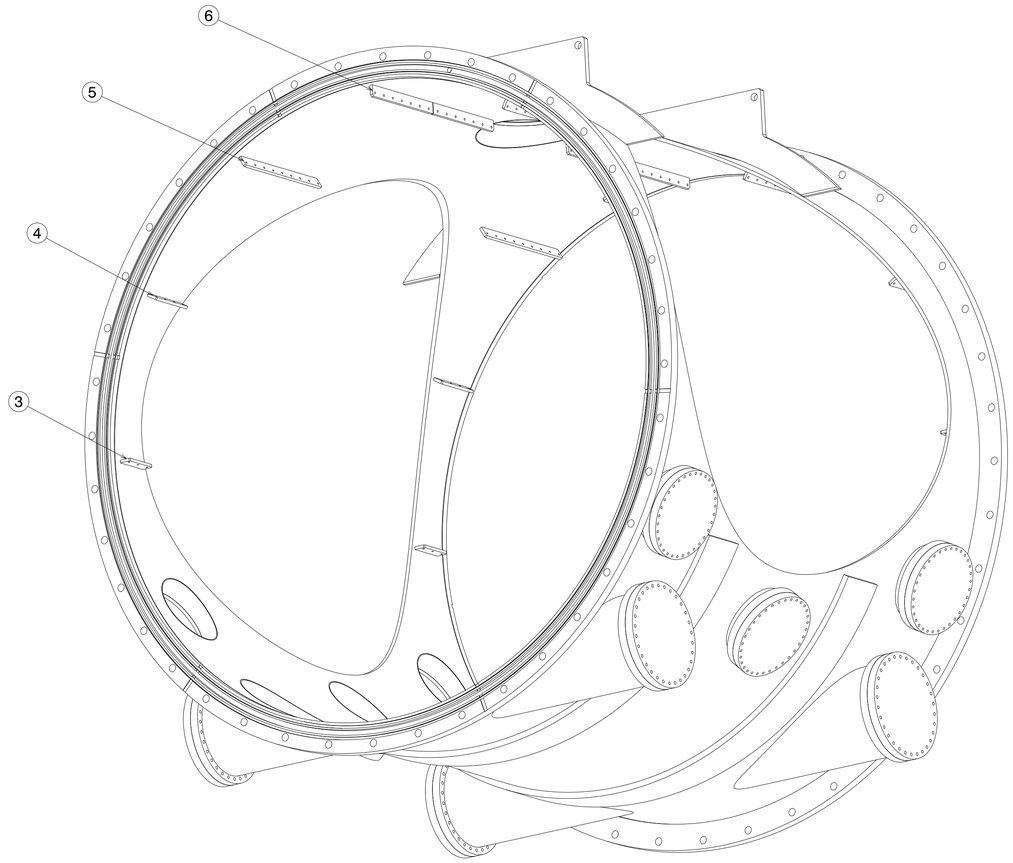

PART NO.	QUANTITY	PART NAME	MATERIAL	REF. DWG. NO.	REMARK
17	01	CUSTOM CF COVER FLANGE (16 1/2")	SS304L	V001-001-R0/SHEET 04	-
16	01	CUSTOM CF BLANK FLANGE (16 1/2")	SS304L	V001-001-R0/SHEET 04	-
15	04	CUSTOM CF COVER FLANGE (14")	SS304L	V001-001-R0/SHEET 02	-
14	04	CUSTOM CF BLANK FLANGE (14")	SS304L	V001-001-R0/SHEET 02	-
13	06	DN 250CF COVER FLANGE	SS304L	V001-001-R0/SHEET 04	-
12	06	DN 250CF BLANK FLANGE	SS304L	V001-001-R0/SHEET 04	-
11	02	FLANGE GROOVED (84.25"ID)	SS304L	VH01-003-R1/SHEET 06	-
10	04	PORT E NOZZLE	SS304L	VH01-003-R1/SHEET 05	-
9	06	PORT D NOZZLE	SS304L	VH01-003-R1/SHEET 05	-
8	01	PORT C NOZZLE	SS304L	VH01-003-R1/SHEET 05	-
7	02	SADDLE ATTACHMENT	SS304L	VH01-003-R1/SHEET 05	-
6	02	INTERNAL ATTACHMENT BRACKET 13D	SS304L	VH01-003-R1/SHEET 04	-
5	04	INTERNAL ATTACHMENT BRACKET 13C	SS304L	VH01-003-R1/SHEET 04	-
4	04	INTERNAL ATTACHMENT BRACKET 13B	SS304L	VH01-003-R1/SHEET 04	-
3	04	INTERNAL ATTACHMENT BRACKET 13A	SS304L	VH01-003-R1/SHEET 04	-
2	02	LIFTING RING & LUGS	SS304L	VH01-003-R1/SHEET 04	-
1	01	CYLINDRICAL SHELL	SS304L	VH01-003-R1/SHEET 03	-

MATERIAL:	▽ 8-25	▽▽ 1.6-8	▽▽▽ 0.025-1.6	▽▽▽▽ < 0.025
CO-ORDINATED BY				

MACHINING DEVIATIONS FOR NON-TOLERANCED DIMENSIONS

LENGTH IN mm OF SHORTER SIDE OF ANGLES				LENGTH OR DIA	UPTO 6	6-30	30-120	120-315
UPTO 10	10-50	50-120	OVER 120-400					
±1°	±0°-30'	±0°-20'	±0°-10'		±0.1	±0.2	±0.3	±0.5

REV	ZONE	DESCRIPTION	DATE	REMARKS	APPROVED BY

REVISION COLUMN

MED	SIZE A1
ALL DIMENSIONS ARE IN 'mm' UNLESS OTHERWISE STATED	
SCALE 1:10	DATE
DRAWN A.N.N.	28/07/2015
CHECKED R.K.	
APPROVED M.K.G.	

THIRD ANGLE PROJECTION

INSTITUTE FOR PLASMA RESEARCH (LIGO-INDIA)
BHAT, GANDHINAGAR-382 428.

TITLE CYLINDRICAL PART (DIA 84.25")

REF DRG NO: VH01-001-R1 REV R1

DRG.NO VH01-003-R1 SHEET 01 OF 06

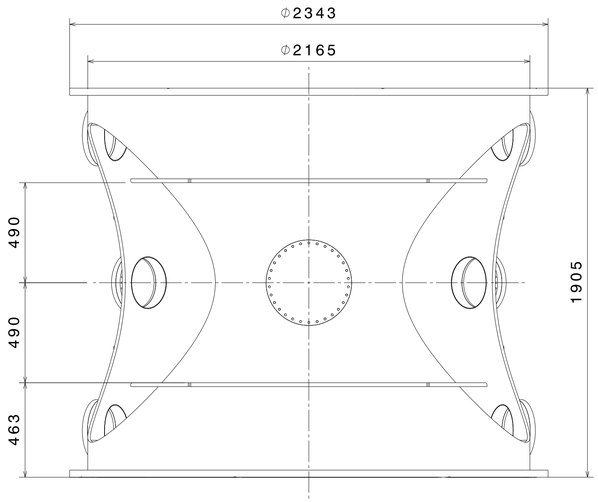

TOP VIEW

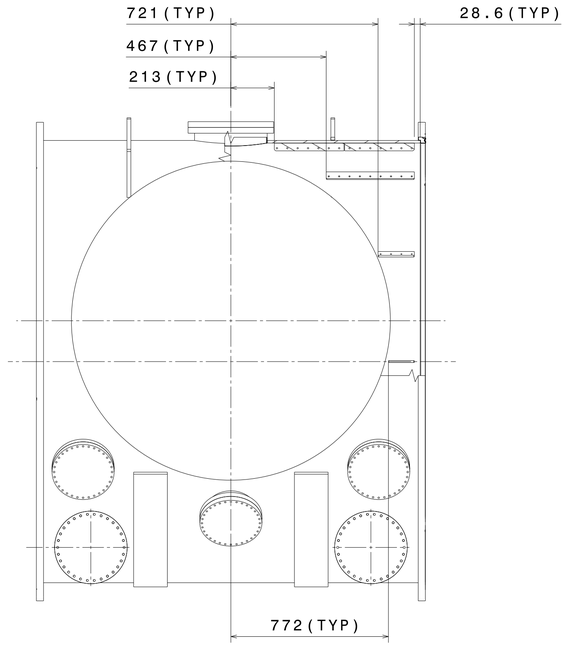

SIDE BREAKOUT VIEW

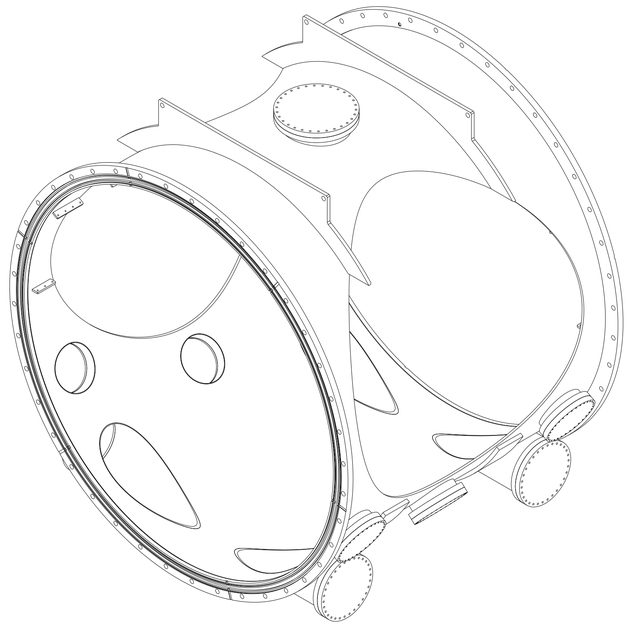

ISOMETRIC VIEW

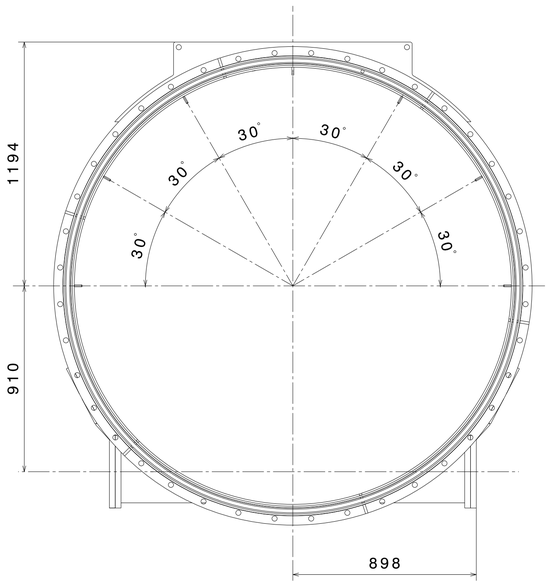

FRONT VIEW

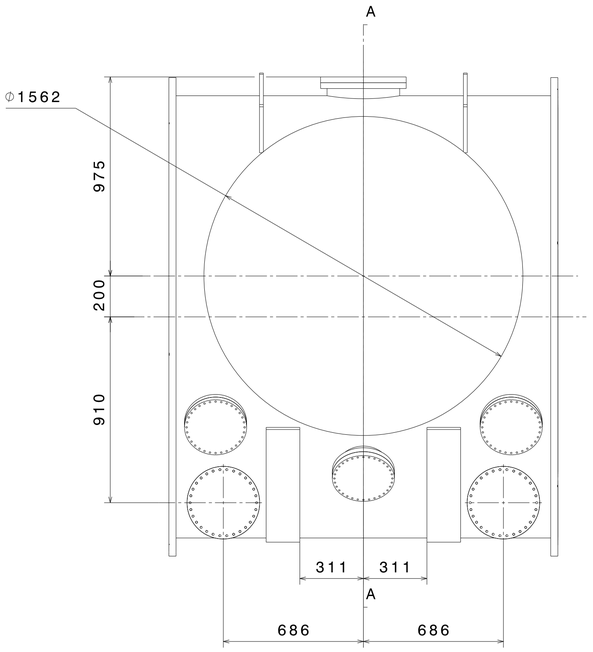

SIDE VIEW

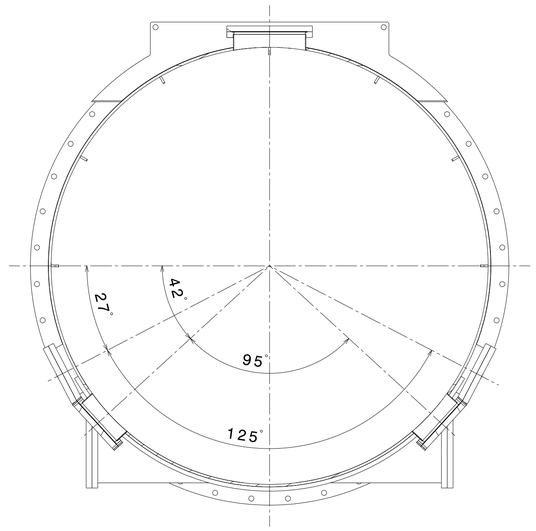

SECTION A-A

2 CYLINDRICAL PART (DIA 84.25")

MATERIAL:	▽ 8-25	▽▽ 1.6-8	▽▽▽ 0.025-1.6	▽▽▽▽ < 0.025
CO-ORDINATED BY				

MACHINING DEVIATIONS FOR NON-TOLERANCED DIMENSIONS

LENGTH IN mm OF SHORTER SIDE OF ANGLES				LENGTH OR DIA	UPTO 6	6-30	30-120	120-315
UPTO 10	10-50	50-120	OVER 120-400					
±1°	±0°-30'	±0°-20'	±0°-10'		±0.1	±0.2	±0.3	±0.5

REVISION COLUMN					
REV	ZONE	DESCRIPTION	DATE	REMARKS	APPROVED BY

MED		SIZE A1
ALL DIMENSIONS ARE IN 'mm' UNLESS OTHERWISE STATED		
SCALE	1:15	DATE
DRAWN	A.N.N.	28/07/2015
CHECKED	R.K.	
APPROVED	M.K.G.	

THIRD ANGLE PROJECTION

INSTITUTE FOR PLASMA RESEARCH
(LIGO-INDIA)
BHAT, GANDHINAGAR-382 428.

TITLE
CYLINDRICAL PART (DIA 84.25")

REF DRG NO: VH01-001-R1 REV R1

DRG.NO VH01-003-R1 SHEET 02 OF 06

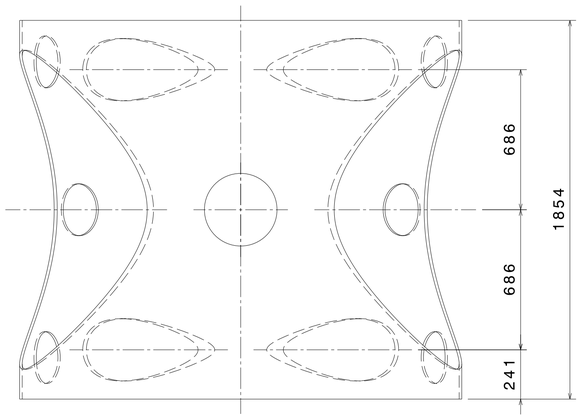

TOP VIEW

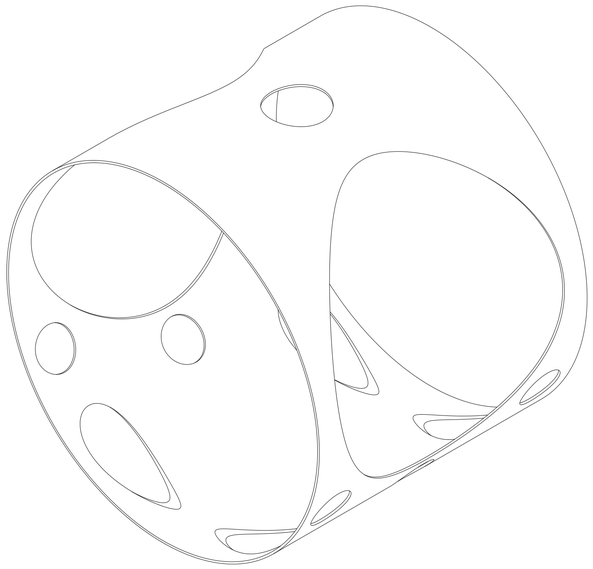

ISOMETRIC VIEW

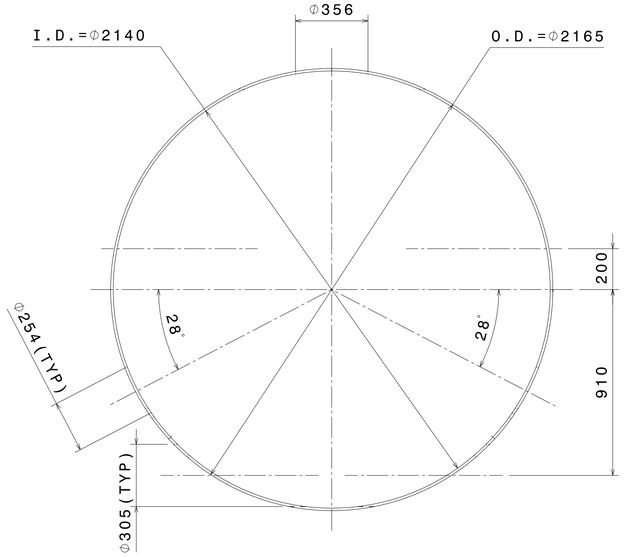

FRONT VIEW

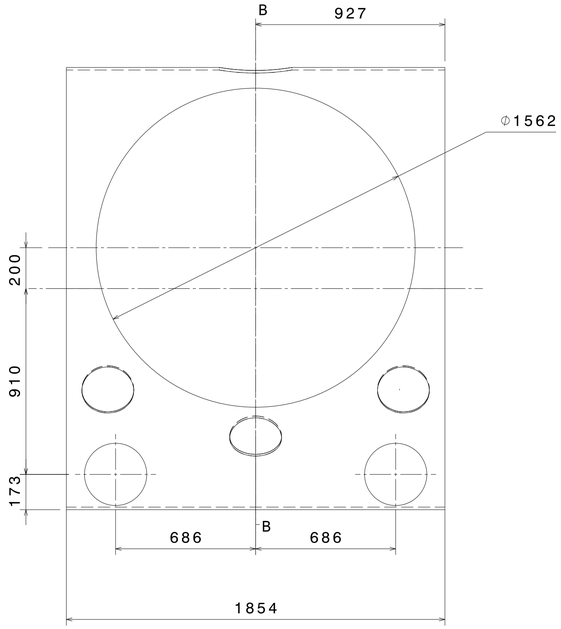

SIDE VIEW

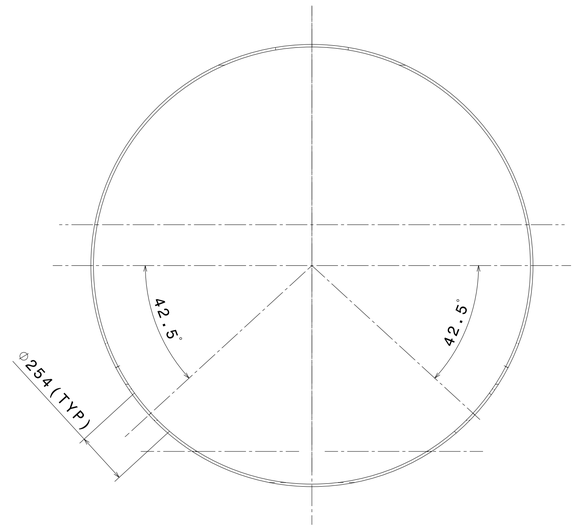

SECTION B-B

1 CYLINDRICAL SHELL

MATERIAL:	▽ 8-25	▽▽ 1.6-8	▽▽▽ 0.025-1.6	▽▽▽▽ < 0.025
CO-ORDINATED BY				

MACHINING DEVIATIONS FOR NON-TOLERANCED DIMENSIONS

LENGTH IN mm OF SHORTER SIDE OF ANGLES				LENGTH OR DIA	UPTO 6	6-30	30-120	120-315
UPTO 10	10-50	50-120	OVER 120-400					
±1'	±0°-30'	±0°-20'	±0°-10'		±0.1	±0.2	±0.3	±0.5

REV	ZONE	DESCRIPTION	DATE	REMARKS	APPROVED BY

REVISION COLUMN

MED		SIZE A1	
ALL DIMENSIONS ARE IN 'mm' UNLESS OTHERWISE STATED			
SCALE	1:15	DATE	
DRAWN	A.N.N.	28/07/2015	THIRD ANGLE PROJECTION
CHECKED	R.K.		
APPROVED	M.K.G.		

INSTITUTE FOR PLASMA RESEARCH
(LIGO-INDIA)
BHAT, GANDHINAGAR-382 428.

TITLE
CYLINDRICAL PART (DIA 84.25")

REF DRG NO: VH01-001-R1 REV R1

DRG.NO VH01-003-R1 SHEET 03 OF 06

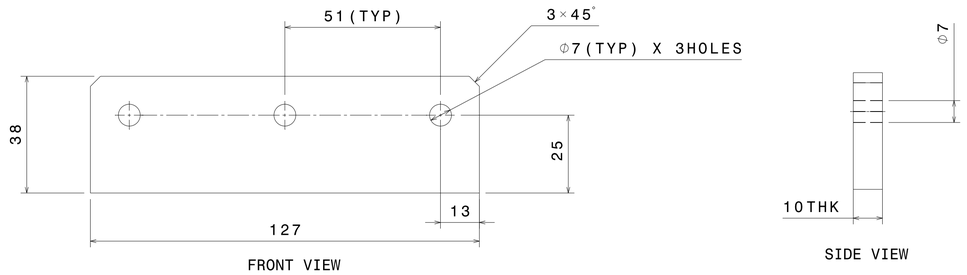

③ INTERNAL ATTACHMENT BRACKET 13A
SCALE-1:1

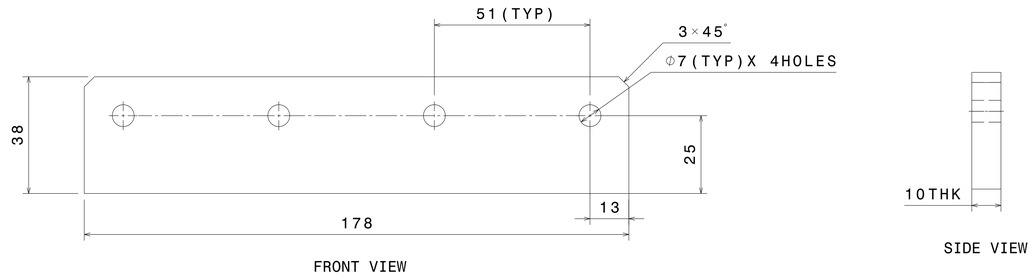

④ INTERNAL ATTACHMENT BRACKET 13B
SCALE-1:1

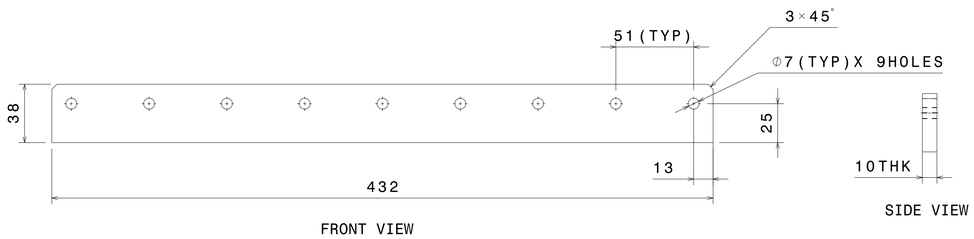

⑤ INTERNAL ATTACHMENT BRACKET 13C
SCALE-1:2

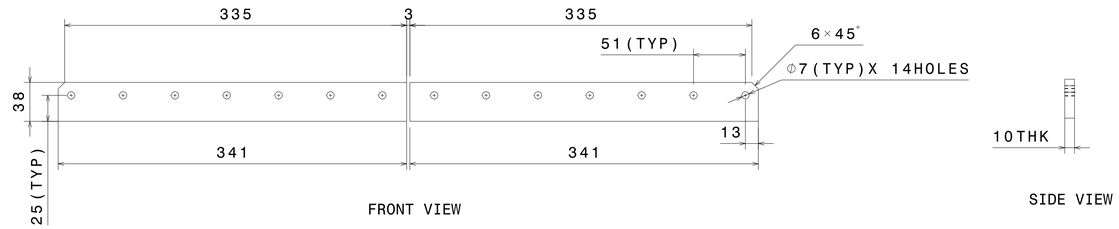

⑥ INTERNAL ATTACHMENT BRACKET 13D
SCALE-1:3

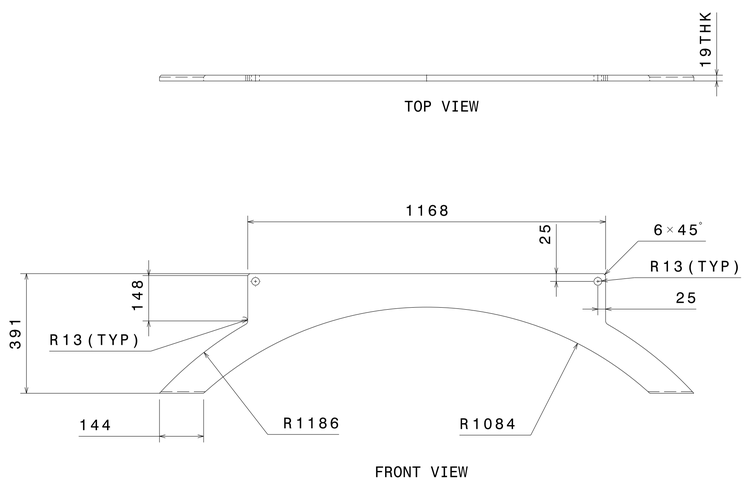

② LIFTING RING & LUGS
SCALE-1:10

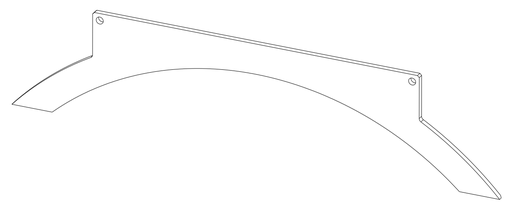

ISOMETRIC VIEW

MATERIAL:	▽ 8-25	▽▽ 1.6-8	▽▽▽ 0.025-1.6	▽▽▽▽ < 0.025
CO-ORDINATED BY				

MACHINING DEVIATIONS FOR NON-TOLERANCED DIMENSIONS

LENGTH IN mm OF SHORTER SIDE OF ANGLES				LENGTH OR DIA	UPTO 6	6-30	30-120	120-315
UPTO 10	10-50	50-120	OVER 120-400					
±1°	±0°-30'	±0°-20'	±0°-10'		±0.1	±0.2	±0.3	±0.5

REVISION COLUMN

REV	ZONE	DESCRIPTION	DATE	REMARKS	APPROVED BY

MED	SIZE A1
ALL DIMENSIONS ARE IN 'mm' UNLESS OTHERWISE STATED	
SCALE	AS NOTED
DRAWN	A.N.N.
CHECKED	R.K.
APPROVED	M.K.G.

DATE 28/07/2015

THIRD ANGLE PROJECTION

INSTITUTE FOR PLASMA RESEARCH
(LIGO-INDIA)
BHAT, GANDHINAGAR-382 428.

TITLE
CYLINDRICAL PART (DIA 84.25")

REF DRG NO: VH01-001-R1 REV R1

DRG.NO VH01-003-R1 SHEET 04 OF 06

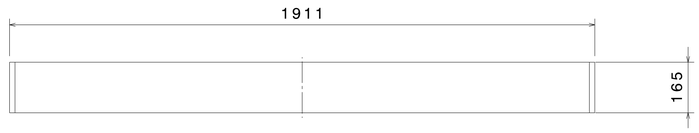

TOP VIEW

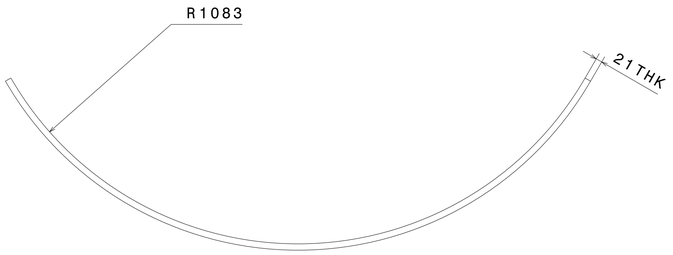

FRONT VIEW

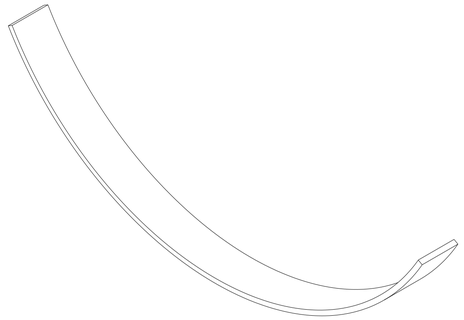

ISOMETRIC VIEW

7 SADDLE ATTACHMENT
SCALE-1:10

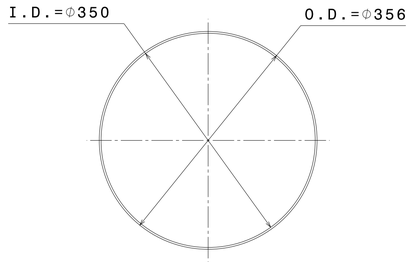

FRONT VIEW

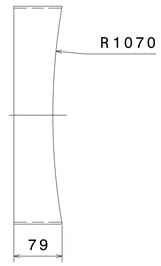

SIDE VIEW

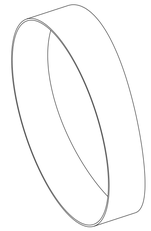

ISOMETRIC VIEW

8 PORT C NOZZLE
SCALE-1:5

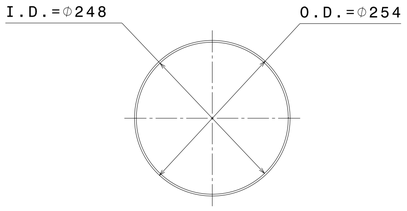

FRONT VIEW

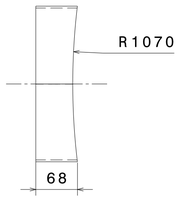

SIDE VIEW

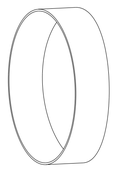

ISOMETRIC VIEW

9 PORT D NOZZLE
SCALE-1:5

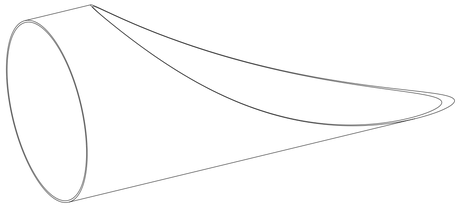

ISOMETRIC VIEW

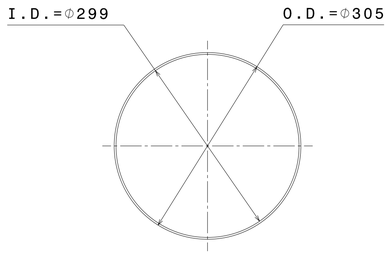

FRONT VIEW

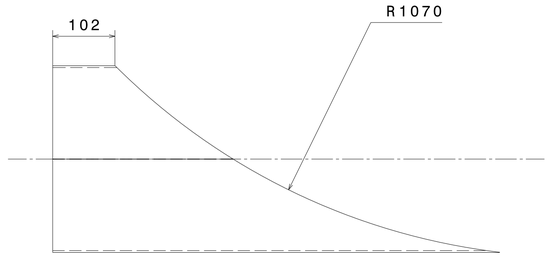

SIDE VIEW

10 PORT E NOZZLE
SCALE-1:5

MATERIAL:	▽ 8-25	▽▽ 1.6-8	▽▽▽ 0.025-1.6	▽▽▽▽ < 0.025															
CO-ORDINATED BY																			
MACHINING DEVIATIONS FOR NON-TOLERANCED DIMENSIONS																			
LENGTH IN mm OF SHORTER SIDE OF ANGLES					LENGTH OR DIA	UPTO 6	6-30	30-120	120-315										
UPTO 10	10-50	50-120	OVER 120-400																
±1'	±0°-30'	±0°-20'	±0°-10'			±0.1	±0.2	±0.3	±0.5										

REVISION COLUMN					
REV	ZONE	DESCRIPTION	DATE	REMARKS	APPROVED BY

MED		SIZE A1	INSTITUTE FOR PLASMA RESEARCH (LIGO-INDIA) BHAT, GANDHINAGAR-382 428.	
ALL DIMENSIONS ARE IN 'mm' UNLESS OTHERWISE STATED				
SCALE	AS NOTED	DATE	THIRD ANGLE PROJECTION	TITLE CYLINDRICAL PART (DIA 84.25")
DRAWN	A.N.N.	28/07/2015		
CHECKED	R.K.		REF DRG NO: VH01-001-R1	REV R1
APPROVED	M.K.G.		DRG.NO VH01-003-R1	SHEET 05 OF 06

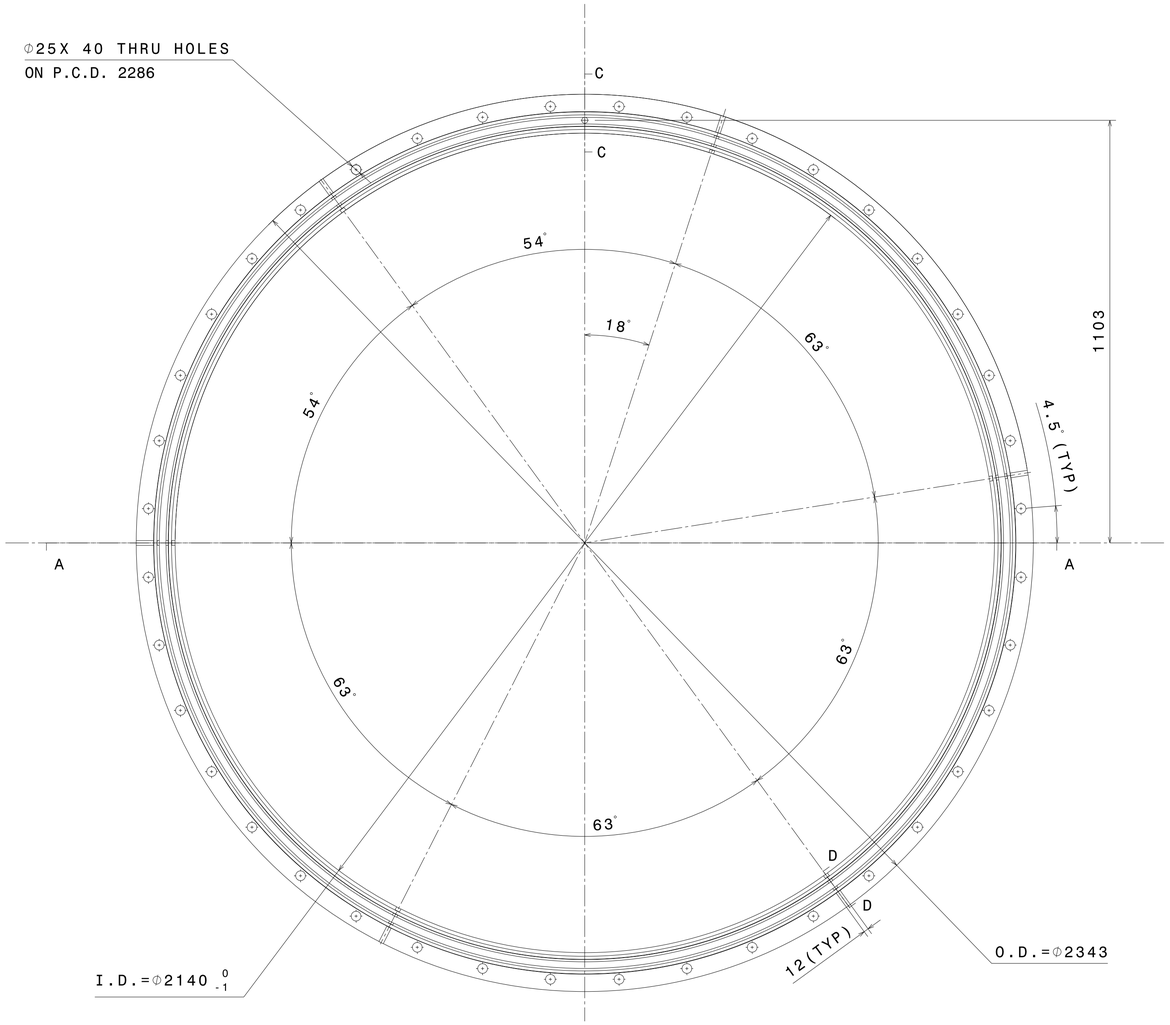

FRONT VIEW

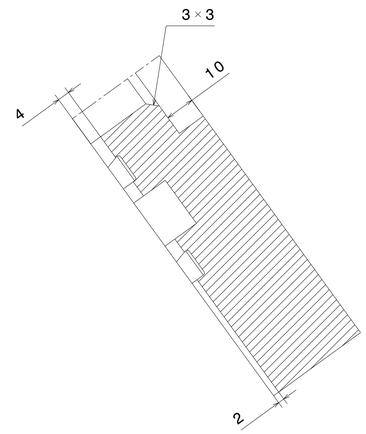

SECTION D-D
SCALE-1:1

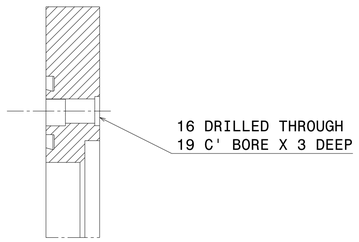

SECTION C-C
SCALE-1:2

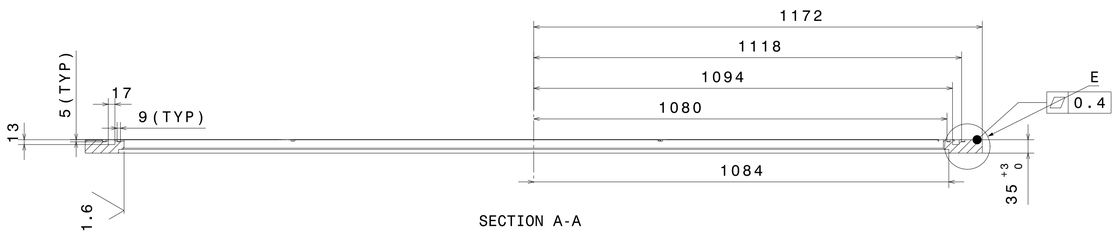

SECTION A-A

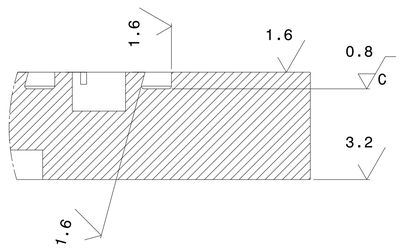

SURFACE ROUGHNESS VALUE

ALL SURFACE ROUGHNESS VALUES
ARE IN RA MICRIMETER

(11) FLANGE GROOVED (84.25"ID)
SCALE-1:8

MATERIAL:	▽ 8-25	▽▽ 1.6-8	▽▽▽ 0.025-1.6	▽▽▽▽ < 0.025
CO-ORDINATED BY				

MACHINING DEVIATIONS FOR NON-TOLERANCED DIMENSIONS

LENGTH IN mm OF SHORTER SIDE OF ANGLES				LENGTH OR DIA	UPTO 6	6-30	30-120	120-315
UPTO 10	10-50	50-120	OVER 120-400					
±1°	±0°-30'	±0°-20'	±0°-10'		±0.1	±0.2	±0.3	±0.5

REV	ZONE	DESCRIPTION	DATE	REMARKS	APPROVED BY

MED		SIZE A1
ALL DIMENSIONS ARE IN mm UNLESS OTHERWISE STATED		
SCALE	AS NOTED	DATE
DRAWN	A.N.N.	28/07/2015
CHECKED	R.K.	
APPROVED	M.K.G.	

THIRD ANGLE PROJECTION

INSTITUTE FOR PLASMA RESEARCH
(LIGO-INDIA)
BHAT, GANDHINAGAR-382 428.

TITLE
CYLINDRICAL PART (DIA 84.25")

REF DRG NO: VH01-001-R1 REV R1

DRG.NO VH01-003-R1 SHEET 06 OF 06

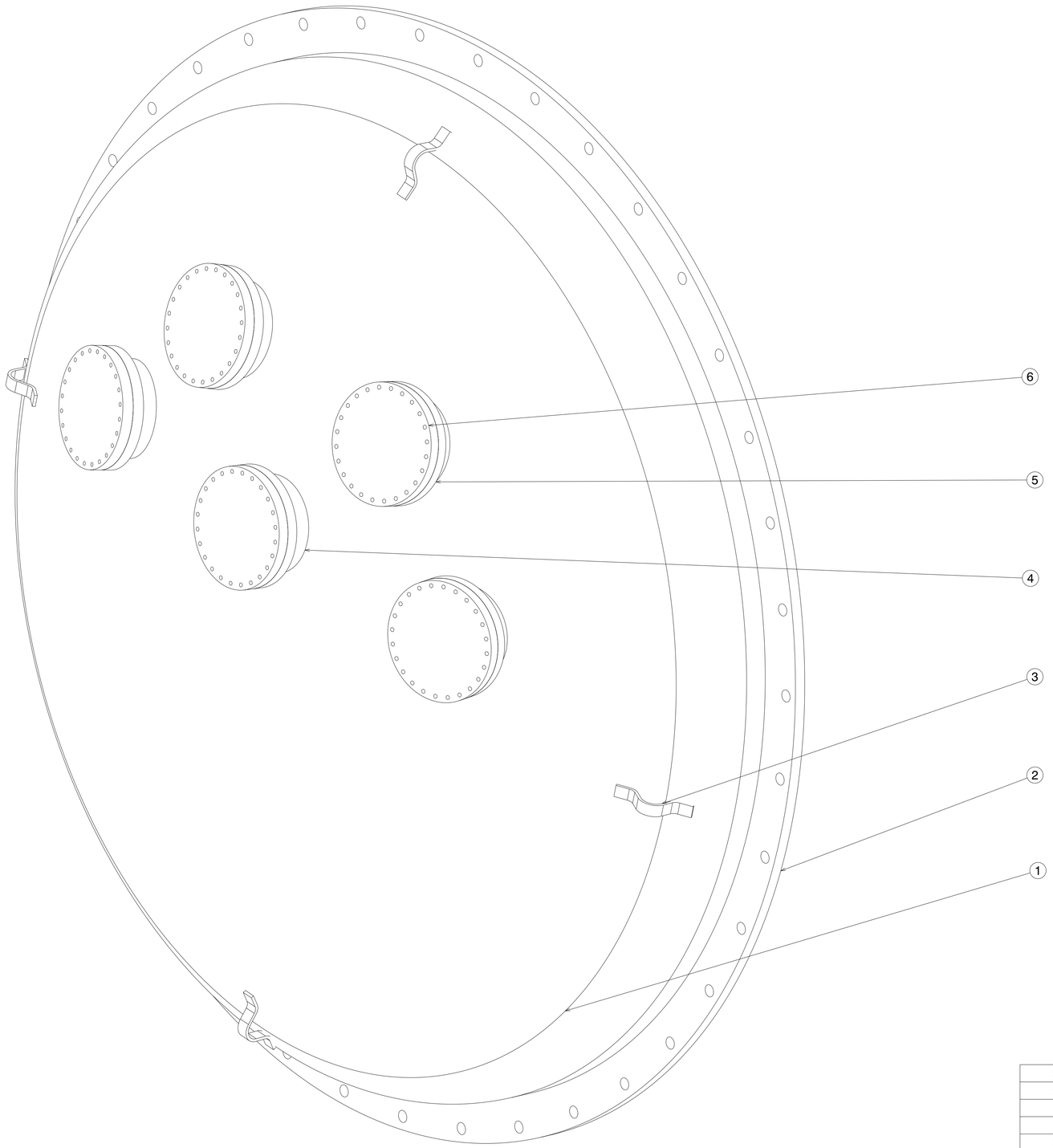

PART NO.	QUANTITY	PART NAME	MATERIAL	REF. DWG. NO.	REMARK
6	05	DN 200CF COVER FLANGE	SS304L	V001-001-R0/SHEET 01	-
5	05	DN 200CF BLANK FLANGE	SS304L	V001-001-R0/SHEET 01	-
4	05	PORT NOZZLE	SS304L	VH01-004-R1/SHEET 04	-
3	04	LIFTING LUG	SS304L	VH01-004-R1/SHEET 04	-
2	01	FLANGE FLAT (84.25"ID)	SS304L	VH01-004-R1/SHEET 04	-
1	01	F & D HEAD	SS304L	VH01-004-R1/SHEET 03	-

3 END COVER BIG

MATERIAL: ▽ 8-25 ▽▽ 1.6-8 ▽▽▽ 0.025-1.6 ▽▽▽▽ < 0.025

CO-ORDINATED BY

MACHINING DEVIATIONS FOR NON-TOLERANCED DIMENSIONS

LENGTH IN mm OF SHORTER SIDE OF ANGLES				LENGTH OR DIA	UPTO 6	6-30	30-120	120-315
UPTO 10	10-50	50-120	OVER 120-400					
±1'	±0°-30'	±0°-20'	±0°-10'		±0.1	±0.2	±0.3	±0.5

REVISION COLUMN					
REV	ZONE	DESCRIPTION	DATE	REMARKS	APPROVED BY

MED — SIZE A1

ALL DIMENSIONS ARE IN 'mm' UNLESS OTHERWISE STATED

INSTITUTE FOR PLASMA RESEARCH (LIGO-INDIA) BHAT, GANDHINAGAR-382 428.

SCALE	1:5	DATE	
DRAWN	A.N.N.	29/07/2015	THIRD ANGLE PROJECTION
CHECKED	R.K.		
APPROVED	M.K.G.		

TITLE: END COVER BIG

REF DRG NO: VH01-001-R1 — REV R1

DRG.NO VH01-004-R1 — SHEET 01 OF 04

FRONT VIEW

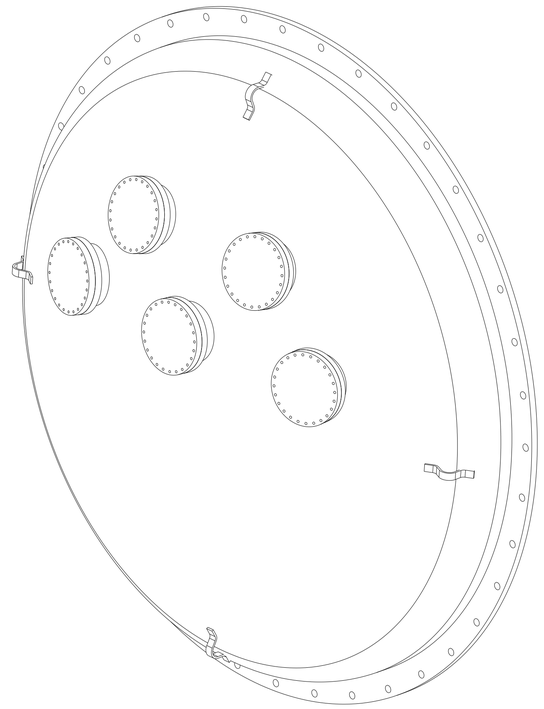

ISOMETRIC VIEW

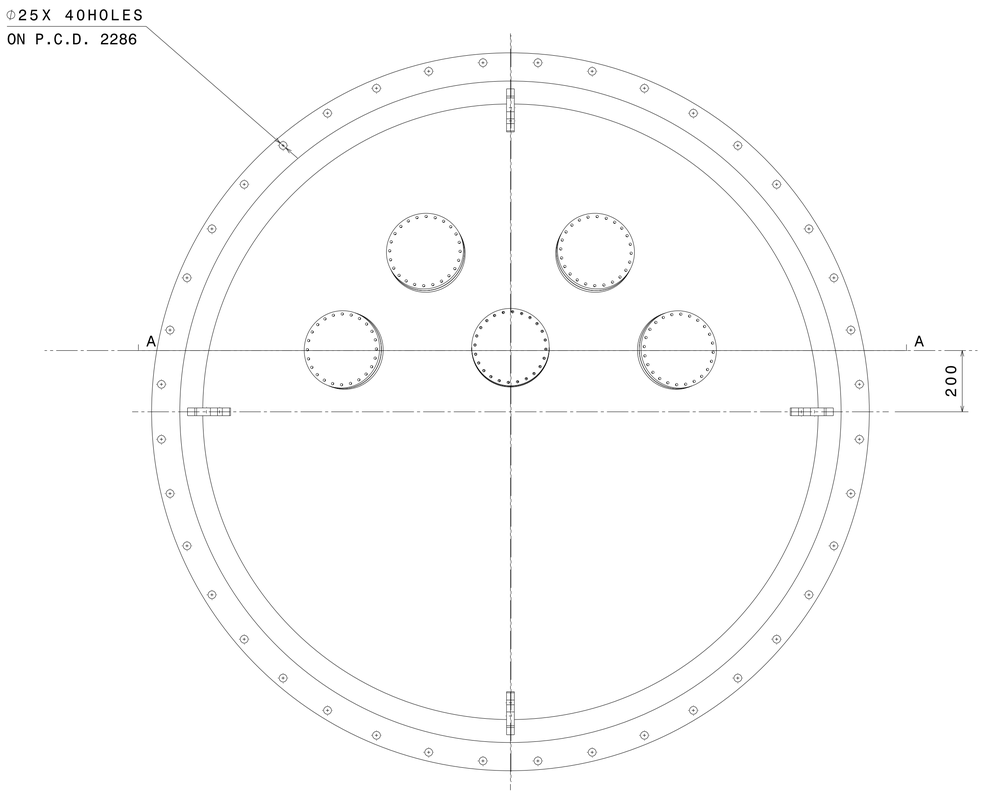

BOTTOM VIEW

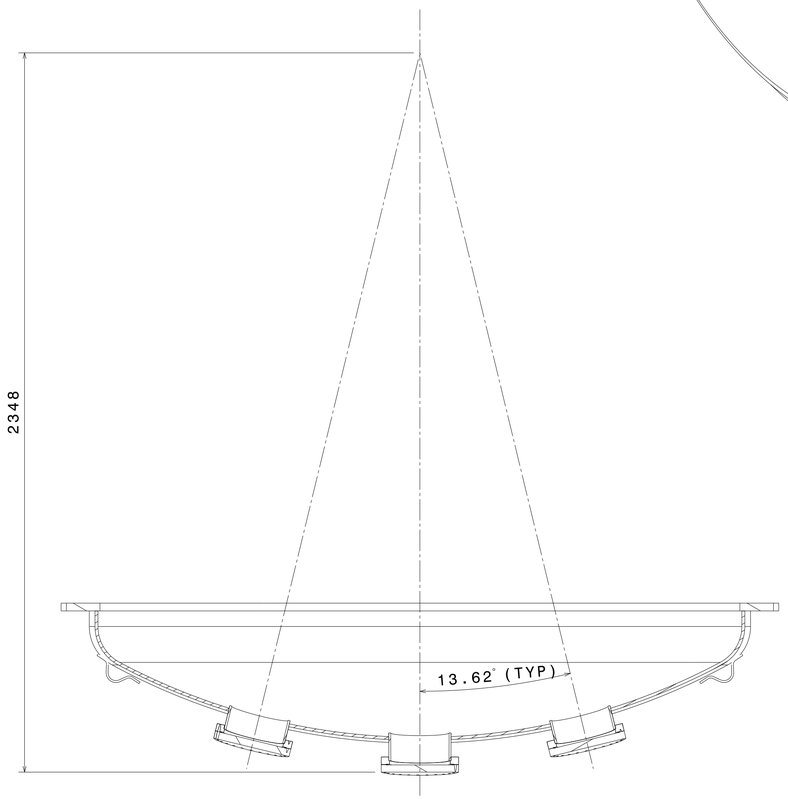

SECTION A-A

3 END COVER BIG

MATERIAL:		▽ 8-25	▽▽ 1.6-8	▽▽▽ 0.025-1.6	▽▽▽▽ < 0.025				REVISION COLUMN						MED	SIZE A1	INSTITUTE FOR PLASMA RESEARCH (LIGO-INDIA) BHAT, GANDHINAGAR-382 428.
CO-ORDINATED BY									REV	ZONE	DESCRIPTION	DATE	REMARKS	APPROVED BY	ALL DIMENSIONS ARE IN 'mm' UNLESS OTHERWISE STATED		
MACHINING DEVIATIONS FOR NON-TOLERANCED DIMENSIONS															SCALE	1:10	DATE
LENGTH IN mm OF SHORTER SIDE OF ANGLES				LENGTH OR DIA	UPTO 6	6-30	30-120	120-315							DRAWN	A.N.N.	29/07/2015
UPTO 10	10-50	50-120	OVER 120-400												CHECKED	R.K.	
±1'	±0°-30'	±0°-20'	±0°-10'		±0.1	±0.2	±0.3	±0.5							APPROVED	M.K.G.	

THIRD ANGLE PROJECTION

TITLE END COVER BIG

REF DRG NO: VH01-001-R1 REV R1

DRG.NO VH01-004-R1 SHEET 02 OF 04

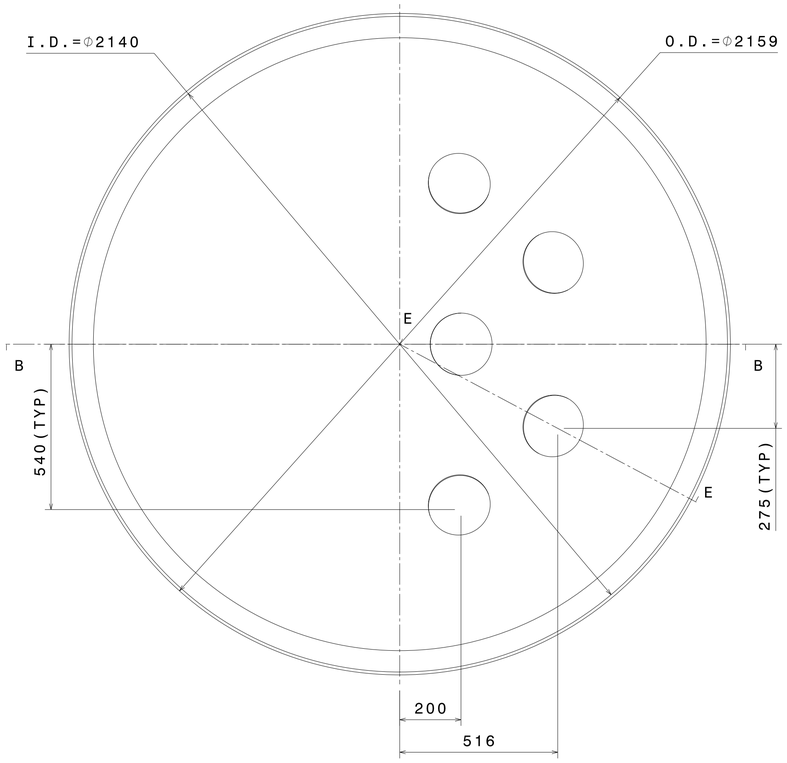

TOP VIEW

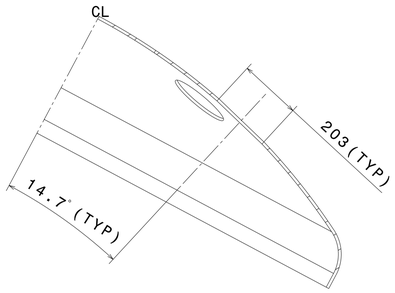

SECTION E-E

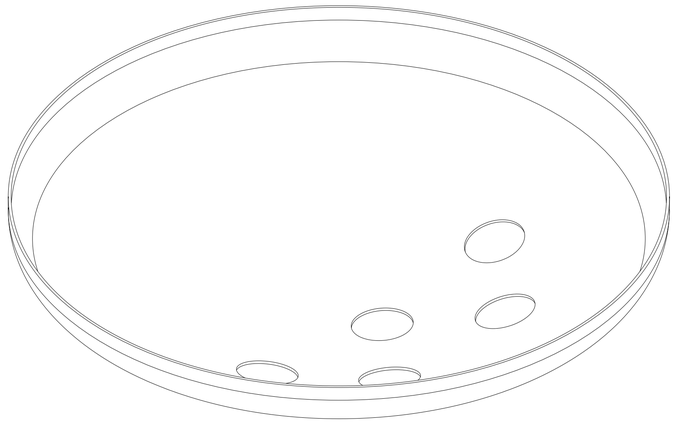

ISOMETRIC VIEW

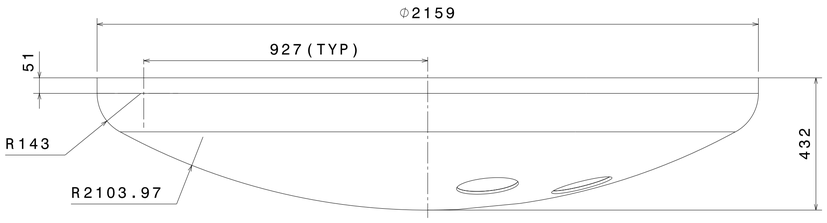

FRONT VIEW

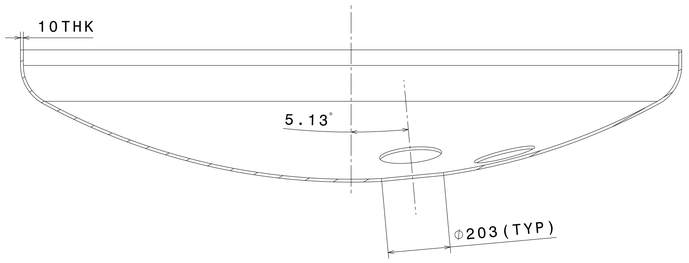

SECTION B-B

1 F & D HEAD

MATERIAL:	▽ 8-25	▽▽ 1.6-8	▽▽▽ 0.025-1.6	▽▽▽▽ < 0.025
CO-ORDINATED BY				

MACHINING DEVIATIONS FOR NON-TOLERANCED DIMENSIONS

LENGTH IN mm OF SHORTER SIDE OF ANGLES				LENGTH OR DIA	UPTO 6	6-30	30-120	120-315
UPTO 10	10-50	50-120	OVER 120-400					
±1°	±0°-30'	±0°-20'	±0°-10'		±0.1	±0.2	±0.3	±0.5

REVISION COLUMN					
REV	ZONE	DESCRIPTION	DATE	REMARKS	APPROVED BY

MED		SIZE A1
ALL DIMENSIONS ARE IN 'mm' UNLESS OTHERWISE STATED		
SCALE	1:10	DATE
DRAWN	A.N.N.	29/07/2015
CHECKED	R.K.	
APPROVED	M.K.G.	

THIRD ANGLE PROJECTION

INSTITUTE FOR PLASMA RESEARCH
(LIGO-INDIA)
BHAT, GANDHINAGAR-382 428.

TITLE
END COVER BIG

REF DRG NO: VH01-001-R1 REV R1

DRG.NO VH01-004-R1 SHEET 03 OF 04

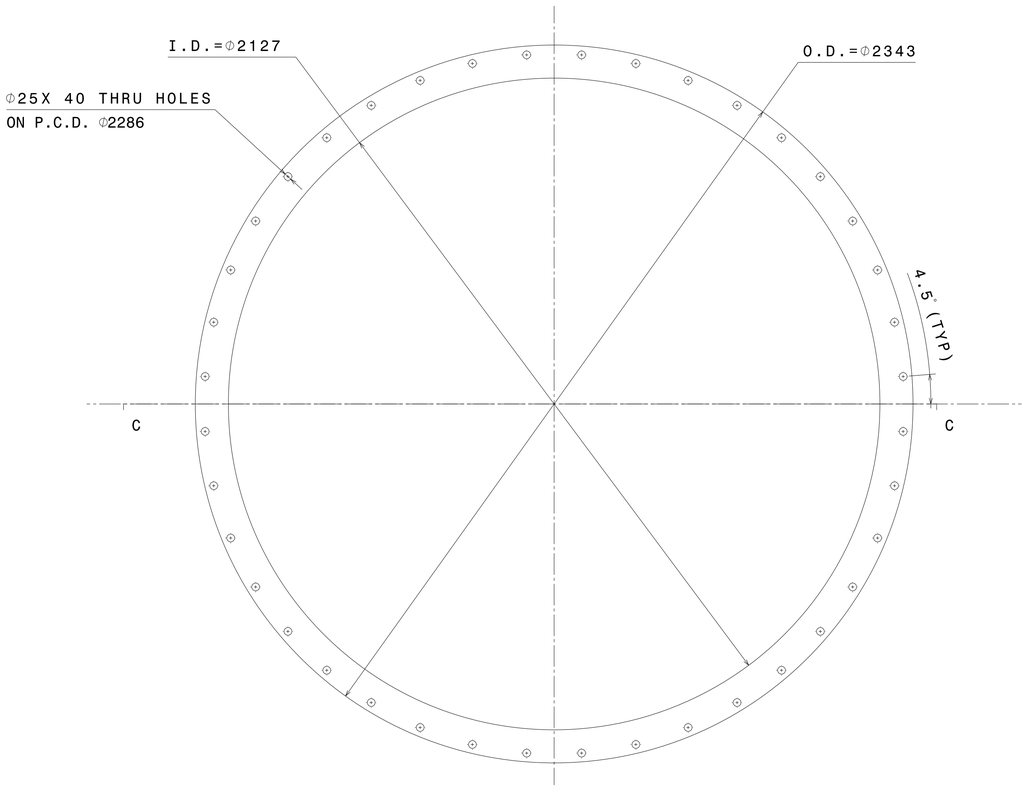

FRONT VIEW

SECTION C-C

2 FLANGE FLAT (84.25"ID)
SCALE-1:10

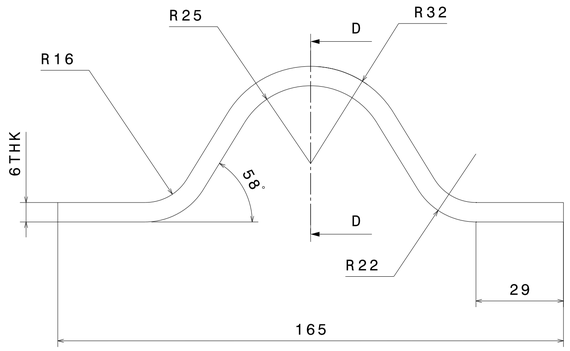

FRONT VIEW

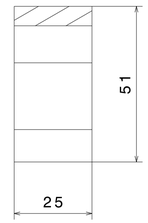

SECTION D-D

3 LIFTING LUG
SCALE-1:1

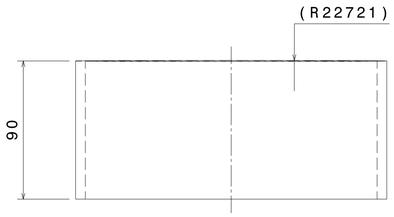

TOP VIEW

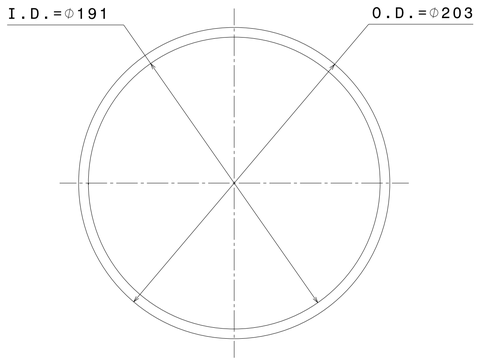

FRONT VIEW

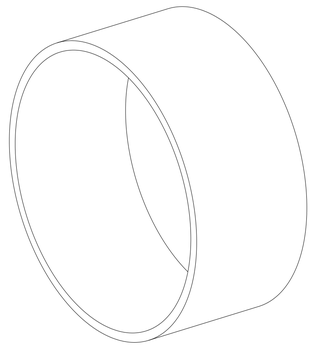

ISOMETRIC VIEW

4 PORT NOZZLE
SCALE-1:2

MATERIAL:	▽ 8-25	▽▽ 1.6-8	▽▽▽ 0.025-1.6	▽▽▽▽ < 0.025
CO-ORDINATED BY				

MACHINING DEVIATIONS FOR NON-TOLERANCED DIMENSIONS

LENGTH IN mm OF SHORTER SIDE OF ANGLES				LENGTH OR DIA	UPTO 6	6-30	30-120	120-315
UPTO 10	10-50	50-120	OVER 120-400					
±1'	±0°-30'	±0°-20'	±0°-10'		±0.1	±0.2	±0.3	±0.5

REVISION COLUMN

REV	ZONE	DESCRIPTION	DATE	REMARKS	APPROVED BY

MED	SIZE A1
ALL DIMENSIONS ARE IN 'mm' UNLESS OTHERWISE STATED	
SCALE	AS NOTED
DATE	
DRAWN	A.N.N. 29/07/2015
CHECKED	R.K.
APPROVED	M.K.G.

THIRD ANGLE PROJECTION

INSTITUTE FOR PLASMA RESEARCH
(LIGO-INDIA)
BHAT, GANDHINAGAR-382 428.

TITLE
END COVER BIG

REF DRG NO: VH01-001-R1 REV R1

DRG.NO VH01-004-R1 SHEET 04 OF 04

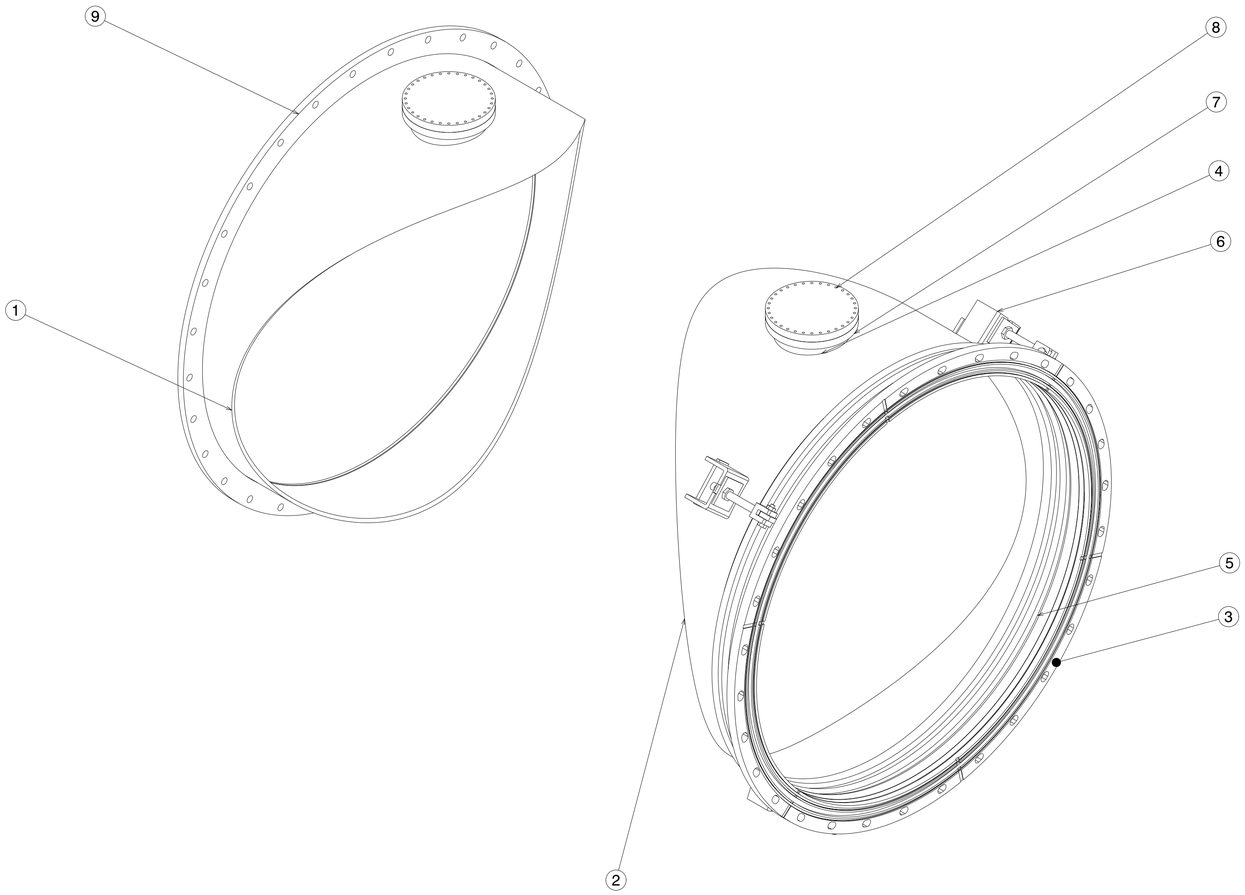

4 CYLINDRICAL PART (DIA 60.5"ID)

PART NO.	QUANTITY	PART NAME	MATERIAL	REF. DWG. NO.	REMARK
9	1	FLANGE FLAT (60.5"ID)	SS304L	V001-005-R0/SHEET 08	-
8	2	DN 250CF COVER FLANGE	SS304L	V001-001-R0/SHEET 03	-
7	2	DN 250CF BLANK FLANGE	SS304L	V001-001-R0/SHEET 03	-
6	4	BELLOW TIE ROD ASSEMBLY	SS304L	VH01-005-R1/SHEET 06	-
5	1	BELLOW	SS304L	VH01-005-R1/SHEET 05	-
4	2	PORT D NOZZLE	SS304L	VH01-005-R1/SHEET 05	-
3	1	FLANGE GROOVED (60.5"ID)	SS304L	VH01-005-R1/SHEET 04	-
2	1	CYLINDRICAL SHELL-2	SS304L	VH01-005-R1/SHEET 03	-
1	1	CYLINDRICAL SHELL-1	SS304L	VH01-005-R1/SHEET 03	-

MATERIAL: ▽ 8-25 ▽▽ 1.6-8 ▽▽▽ 0.025-1.6 ▽▽▽▽ < 0.025

CO-ORDINATED BY

MACHINING DEVIATIONS FOR NON-TOLERANCED DIMENSIONS

LENGTH IN mm OF SHORTER SIDE OF ANGLES				LENGTH OR DIA	UPTO 6	6-30	30-120	120-315
UPTO 10	10-50	50-120	OVER 120-400					
±1'	±0'-30'	±0'-20'	±0'-10'		±0.1	±0.2	±0.3	±0.5

REVISION COLUMN

REV	ZONE	DESCRIPTION	DATE	REMARKS	APPROVED BY

MED | SIZE A1

ALL DIMENSIONS ARE IN 'mm' UNLESS OTHERWISE STATED

INSTITUTE FOR PLASMA RESEARCH (LIGO-INDIA) BHAT, GANDHINAGAR-382 428.

SCALE	1:10	DATE	
DRAWN	A.N.N.	30/07/2015	THIRD ANGLE PROJECTION
CHECKED	R.K.		
APPROVED	M.K.G.		

TITLE: CYLINDRICAL PART (DIA 60.5"ID)

REF DRG NO: VH01-001-R1 REV R1

DRG.NO VH01-005-R1 SHEET 01 OF 08

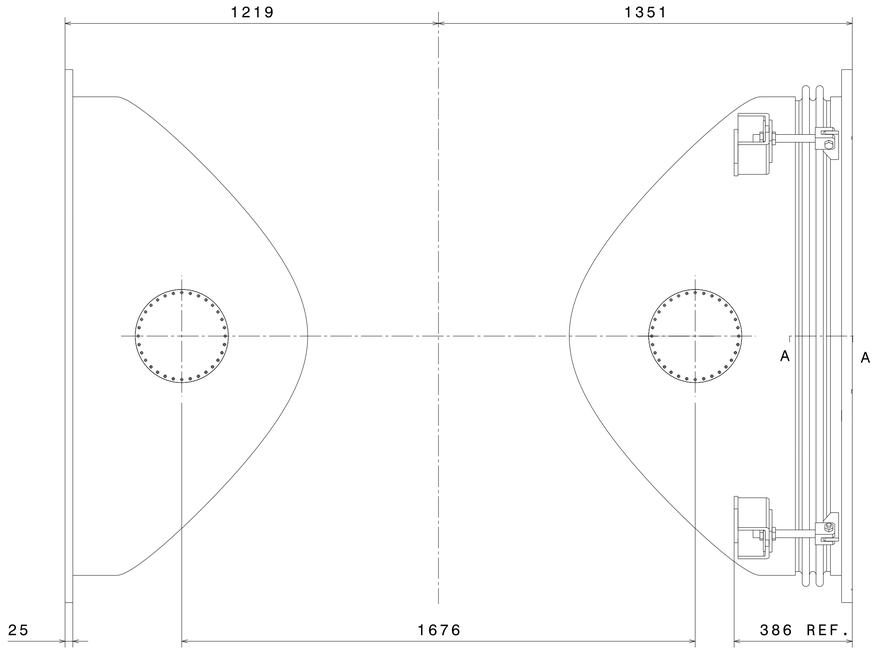

TOP VIEW

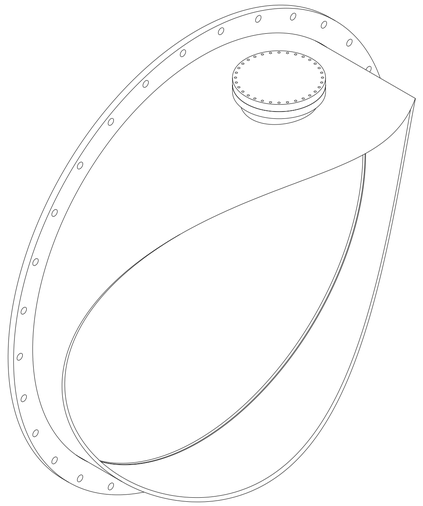

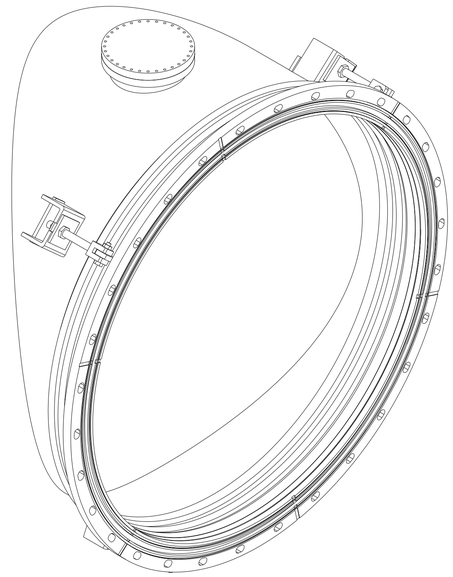

ISOMETRIC VIEW

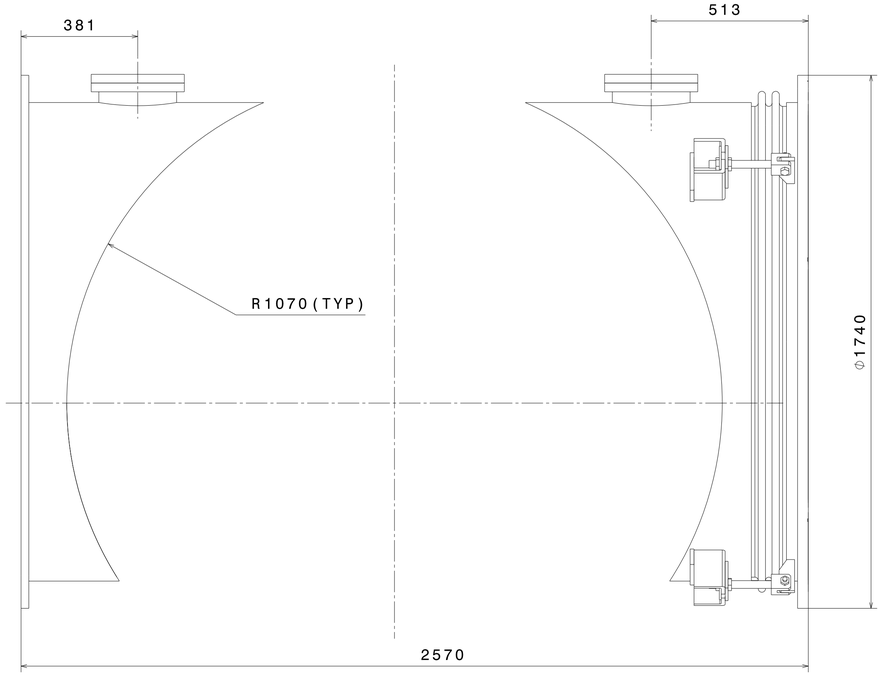

FRONT VIEW

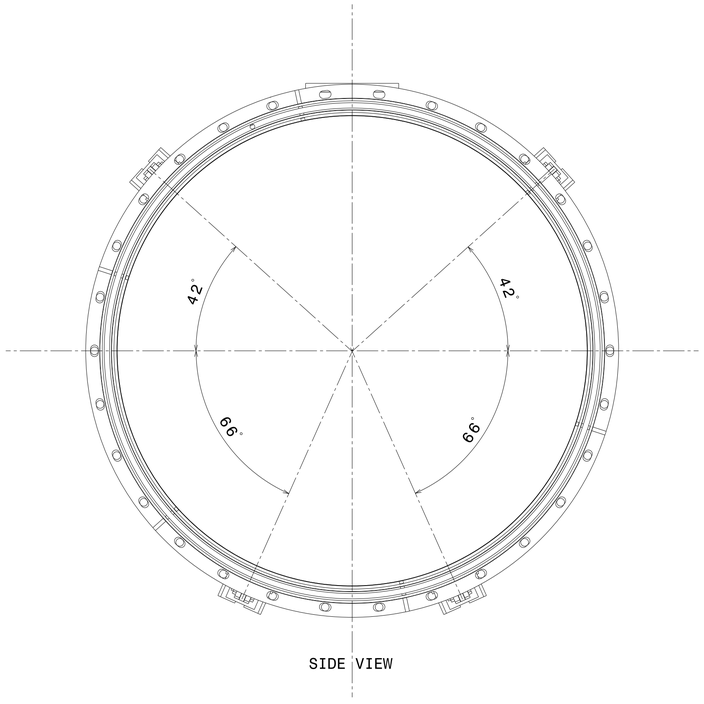

SIDE VIEW

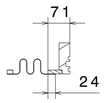

SECTION A-A

4 CYLINDRICAL PART DIA (60.5"ID)

MATERIAL:	▽ 8-25	▽▽ 1.6-8	▽▽▽ 0.025-1.6	▽▽▽▽ < 0.025					REVISION COLUMN						MED	SIZE A1	INSTITUTE FOR PLASMA RESEARCH (LIGO-INDIA) BHAT, GANDHINAGAR-382 428.
CO-ORDINATED BY									REV	ZONE	DESCRIPTION	DATE	REMARKS	APPROVED BY	ALL DIMENSIONS ARE IN 'mm' UNLESS OTHERWISE STATED		
MACHINING DEVIATIONS FOR NON-TOLERANCED DIMENSIONS															SCALE	1:10	DATE
LENGTH IN mm OF SHORTER SIDE OF ANGLES					LENGTH OR DIA	UPTO 6	6-30	30-120	120-315						DRAWN	A.N.N.	30/07/2015
UPTO 10	10-50	50-120	OVER 120-400												CHECKED	R.K.	
±1'	±0'-30'	±0'-20'	±0'-10'			±0.1	±0.2	±0.3	±0.5						APPROVED	M.K.G.	

THIRD ANGLE PROJECTION

TITLE CYLINDRICAL PART (DIA 60.5"ID)

REF DRG NO: VH01-001-R1 REV R1

DRG.NO VH01-005-R1 SHEET 02 OF 08

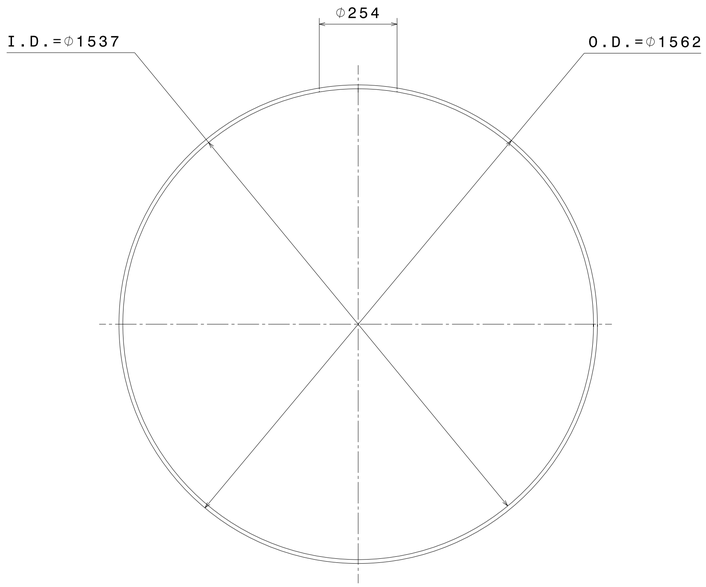

FRONT VIEW

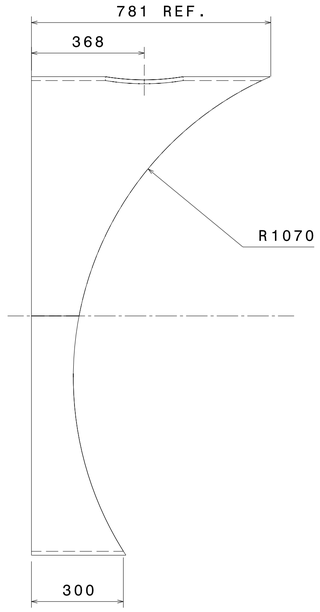

SIDE VIEW

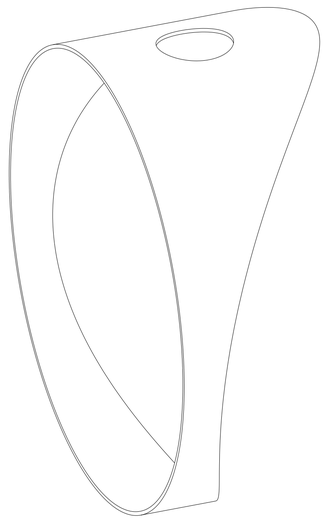

ISOMETRIC VIEW

1 CYLINDRICAL SHELL-1

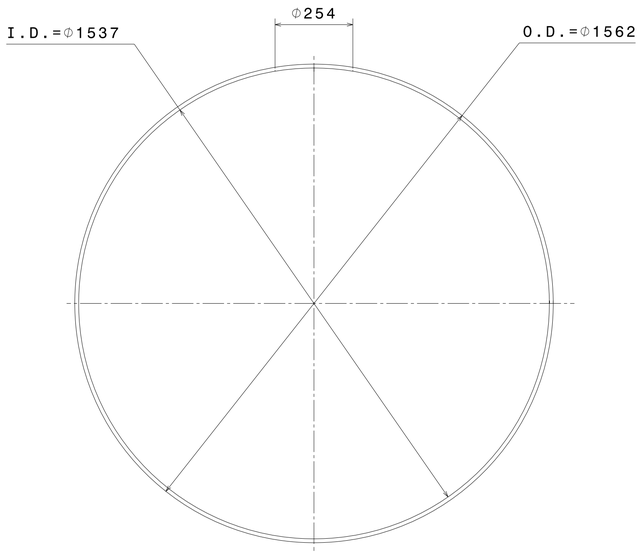

FRONT VIEW

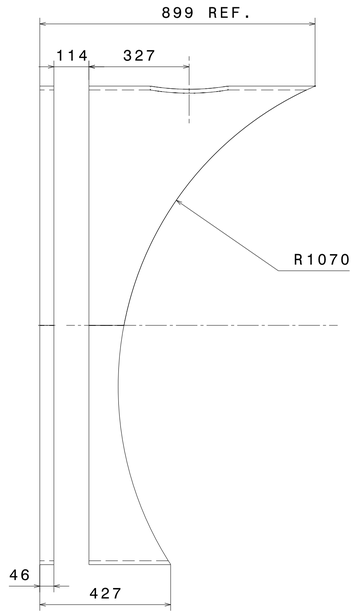

SIDE VIEW

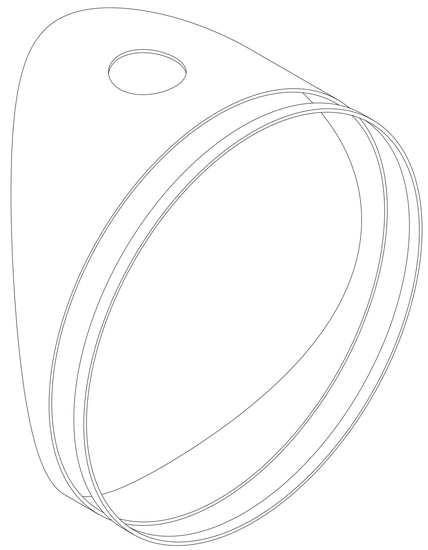

ISOMETRIC VIEW

2 CYLINDRICAL SHELL-2

MATERIAL:	▽ 8-25	▽▽ 1.6-8	▽▽▽ 0.025-1.6	▽▽▽▽ < 0.025
CO-ORDINATED BY				

MACHINING DEVIATIONS FOR NON-TOLERANCED DIMENSIONS

LENGTH IN mm OF SHORTER SIDE OF ANGLES				LENGTH OR DIA	UPTO 6	6-30	30-120	120-315
UPTO 10	10-50	50-120	OVER 120-400					
±1°	±0°-30'	±0°-20'	±0°-10'		±0.1	±0.2	±0.3	±0.5

REVISION COLUMN

REV	ZONE	DESCRIPTION	DATE	REMARKS	APPROVED BY

MED		SIZE A1
ALL DIMENSIONS ARE IN mm UNLESS OTHERWISE STATED		
SCALE	1:10	DATE
DRAWN	A.N.N.	30/07/2015
CHECKED	R.K.	
APPROVED	M.K.G.	

THIRD ANGLE PROJECTION

INSTITUTE FOR PLASMA RESEARCH
(LIGO-INDIA)
BHAT, GANDHINAGAR-382 428.

TITLE
CYLINDRICAL PART (DIA 60.5"ID)

REF DRG NO: VH01-001-R1 REV R1

DRG.NO VH01-005-R1 SHEET 03 OF 08

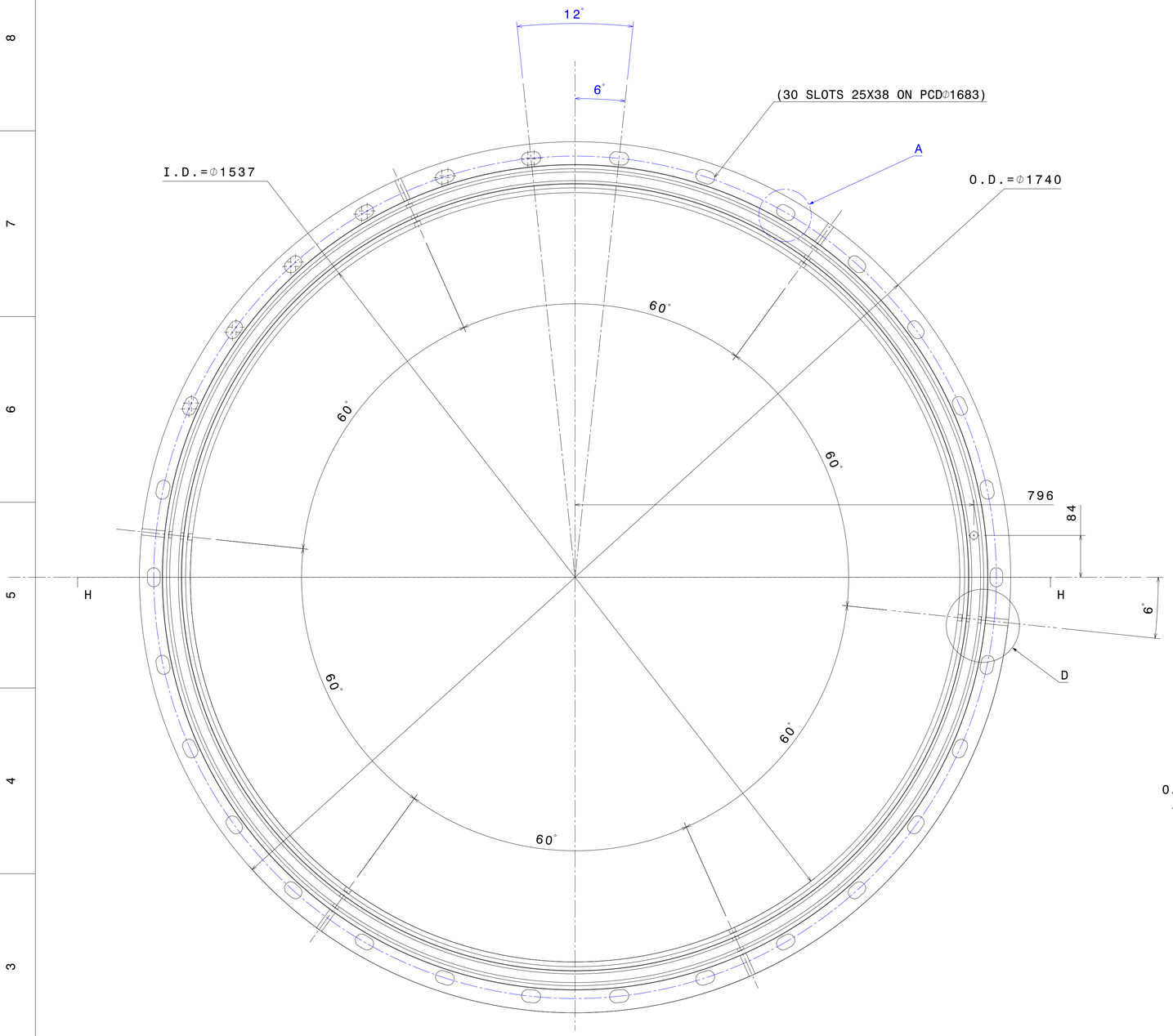

FRONT VIEW

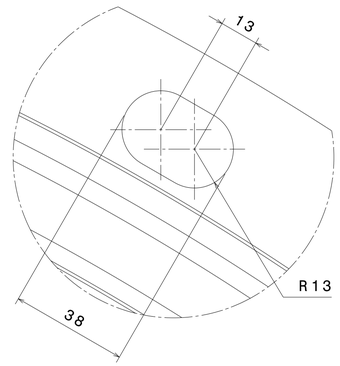

DETAIL VIEW A
SCALE 1:1

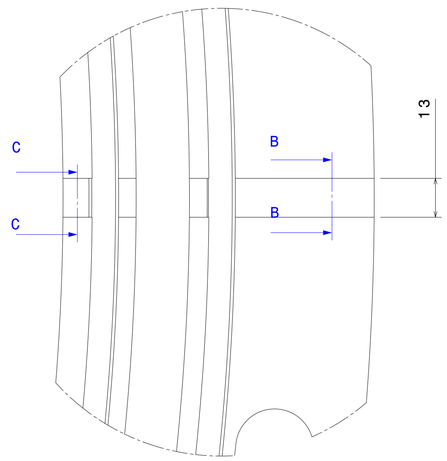

SECTION D-D
SCALE 1:1

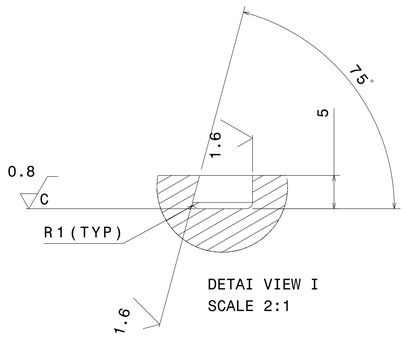

DETAI VIEW I
SCALE 2:1

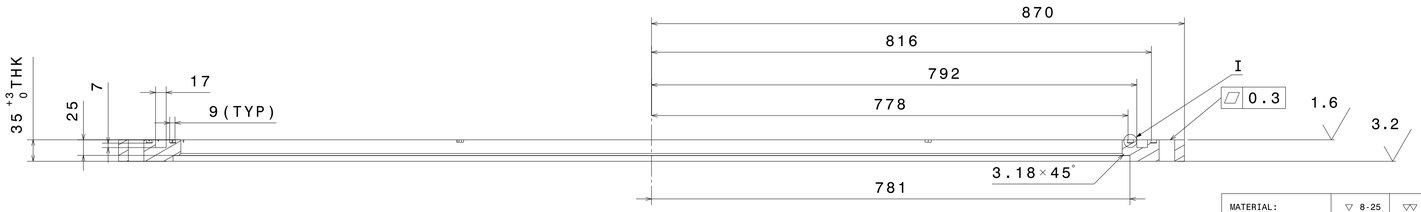

SECTION H-H

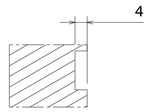

SECTION C-C
SCALE 1:1

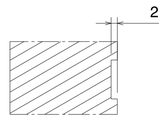

SECTION B-B
SCALE 1:1

(3) FLANGE GROOVED (60.5"ID)
SCALE-1:5

MATERIAL:	▽ 8-25	▽▽ 1.6-8	▽▽▽ 0.025-1.6	▽▽▽▽ < 0.025
CO-ORDINATED BY				

MACHINING DEVIATIONS FOR NON-TOLERANCED DIMENSIONS

LENGTH IN mm OF SHORTER SIDE OF ANGLES				LENGTH OR DIA	UPTO 6	6-30	30-120	120-315
UPTO 10	10-50	50-120	OVER 120-400					
±1°	±0°-30'	±0°-20'	±0°-10'		±0.1	±0.2	±0.3	±0.5

REVISION COLUMN

REV	ZONE	DESCRIPTION	DATE	REMARKS	APPROVED BY

MED		SIZE A1
ALL DIMENSIONS ARE IN 'mm' UNLESS OTHERWISE STATED		
SCALE	AS NOTED	DATE
DRAWN	A.N.N.	30/07/2015
CHECKED	R.K.	
APPROVED	M.K.G.	

THIRD ANGLE PROJECTION

INSTITUTE FOR PLASMA RESEARCH
(LIGO-INDIA)
BHAT, GANDHINAGAR-382 428.

TITLE
CYLINDRICAL PART (DIA 60.5"ID)

REF DRG NO: VH01-001-R1 REV R1

DRG.NO VH01-005-R1 SHEET 04 OF 08

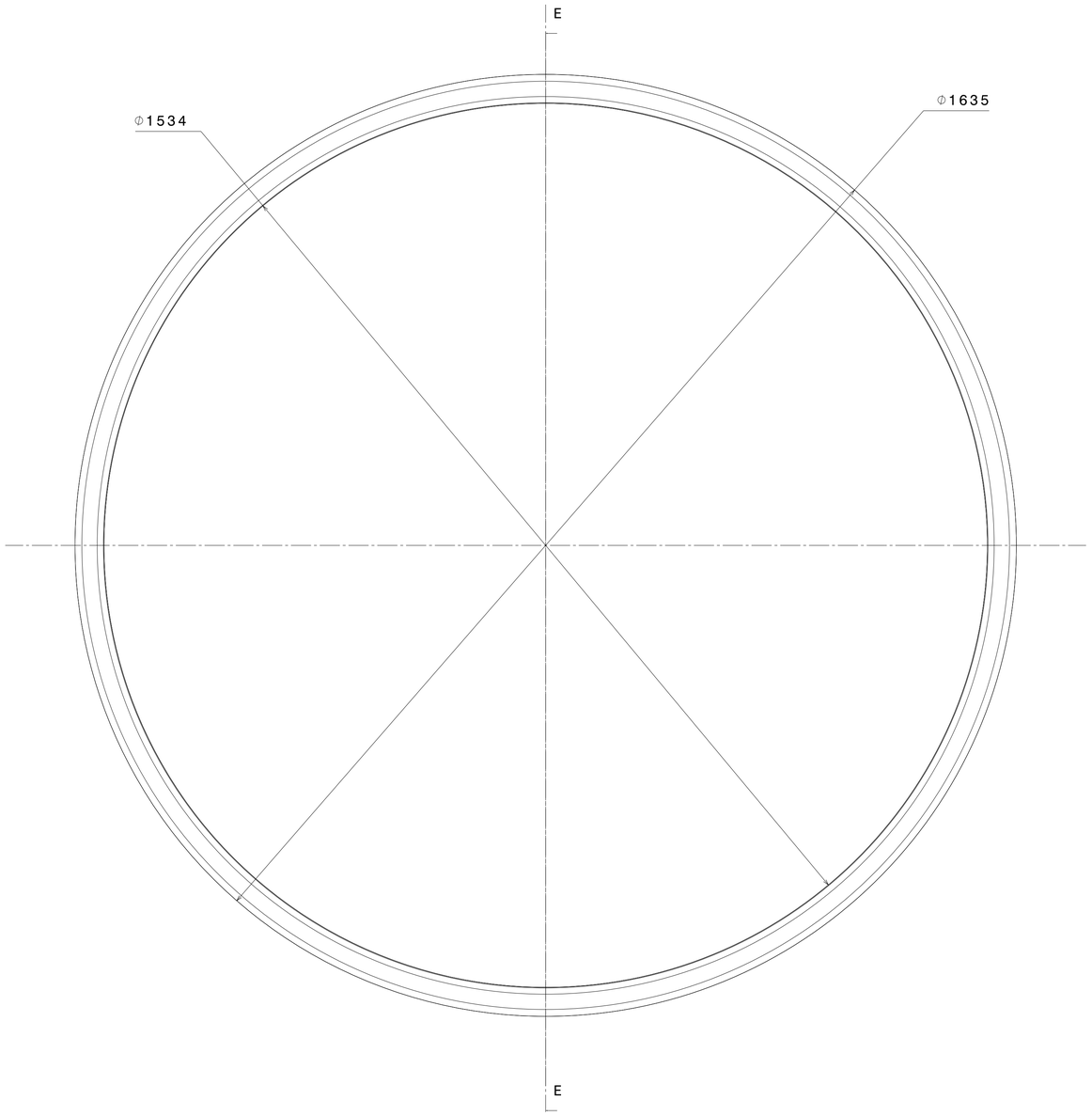

FRONT VIEW

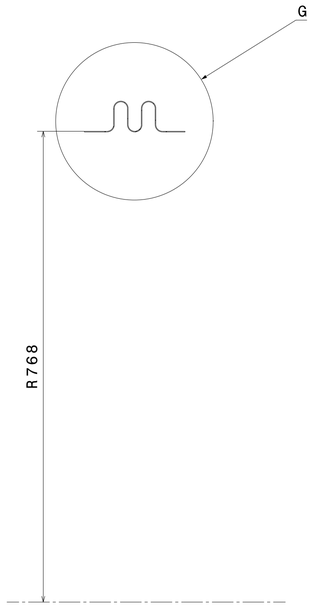

SECTION E-E

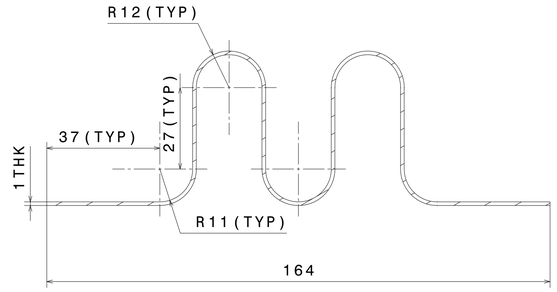

DETAIL VIEW-G
SCALE-1:1

5 BELLOW
SCALE-1:5

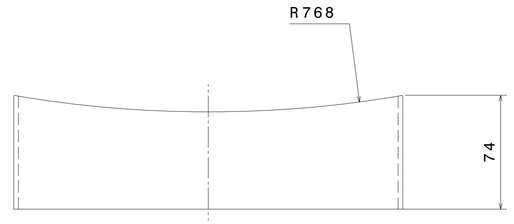

TOP VIEW

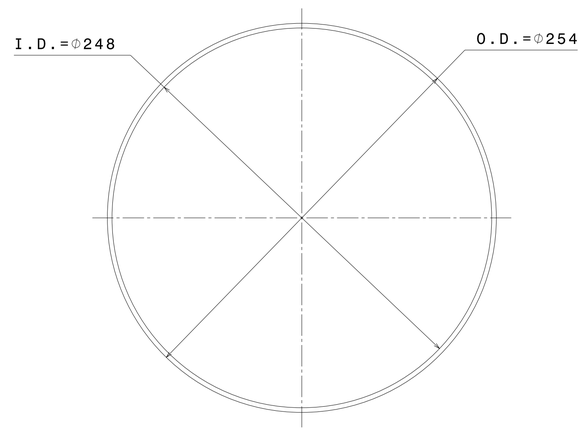

FRONT VIEW

4 PORT D NOZZLE
SCALE-1:2

MATERIAL:		▽ 8-25	▽▽ 1.6-8	▽▽▽ 0.025-1.6	▽▽▽▽ < 0.025														
CO-ORDINATED BY																			
MACHINING DEVIATIONS FOR NON-TOLERANCED DIMENSIONS																			
LENGTH IN mm OF SHORTER SIDE OF ANGLES					LENGTH OR DIA	UPTO 6	6-30	30-120	120-315										
UPTO 10	10-50	50-120	OVER 120-400																
±1'	±0'-30'	±0'-20'	±0'-10'			±0.1	±0.2	±0.3	±0.5										

REV	ZONE	DESCRIPTION	DATE	REMARKS	APPROVED BY

REVISION COLUMN

MED	SIZE A1		
ALL DIMENSIONS ARE IN 'mm' UNLESS OTHERWISE STATED			
SCALE	AS NOTED	DATE	
DRAWN	A.N.N.	30/07/2015	THIRD ANGLE PROJECTION
CHECKED	R.K.		
APPROVED	M.K.G.		

INSTITUTE FOR PLASMA RESEARCH
(LIGO-INDIA)
BHAT, GANDHINAGAR-382 428.

TITLE
CYLINDRICAL PART (DIA 60.5"ID)

REF DRG NO: VH01-001-R1 REV R1

DRG.NO VH01-005-R1 SHEET 05 OF 08

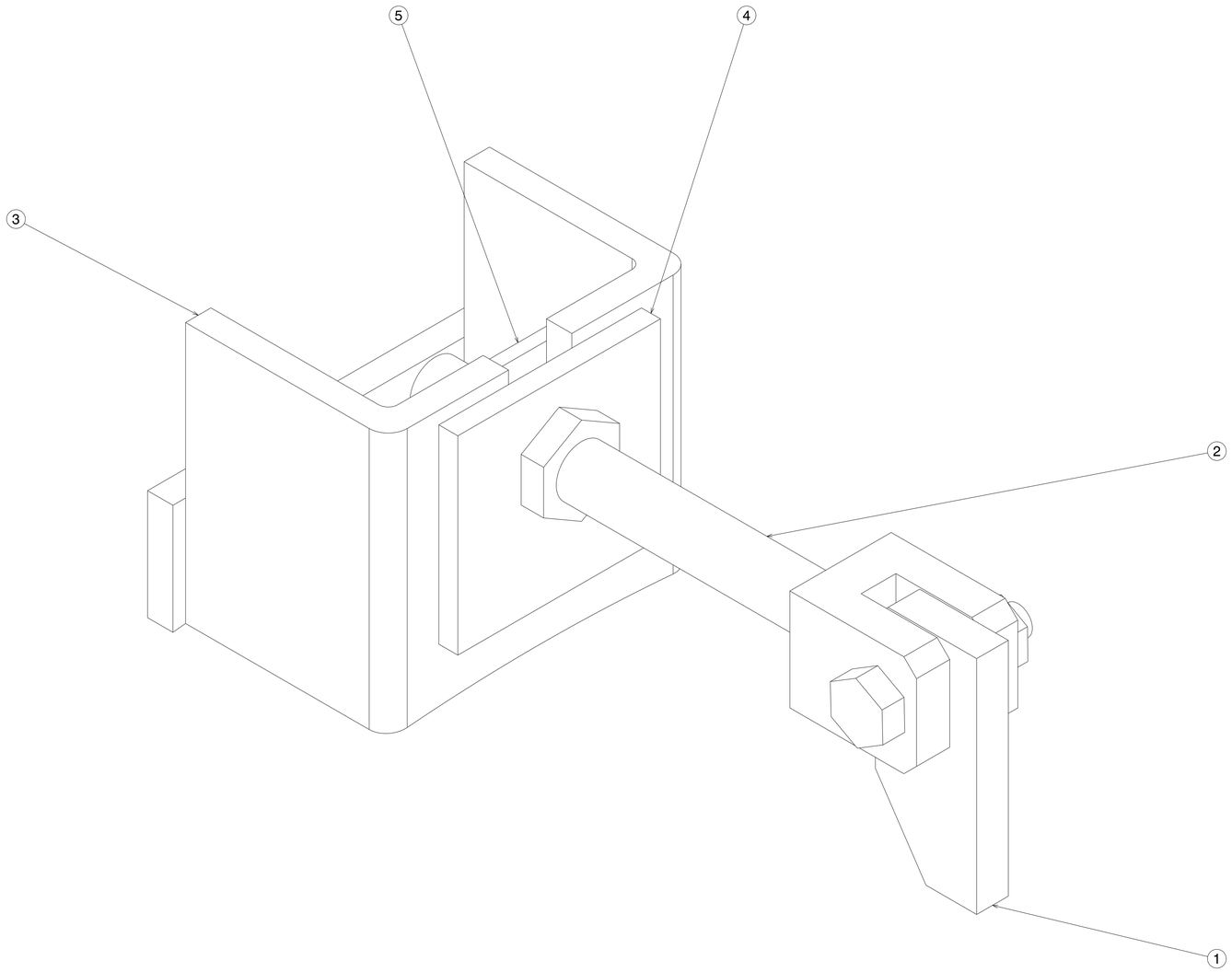

6 BELLOW TIE ROD ASSEMBLY

PART NO.	QUANTITY	PART NAME	MATERIAL	REF. DWG. NO.	REMARK
5	01	PLATE-3	SS304L	VH01-005-R1/SHEET 07	-
4	01	PLATE-2	SS304L	VH01-005-R1/SHEET 07	-
3	01	BRACKET	SS304L	VH01-005-R1/SHEET 07	-
2	01	ROD	SS304L	VH01-005-R1/SHEET 07	-
1	01	PLATE-1	SS304L	VH01-005-R1/SHEET 07	-

MATERIAL:	▽ 8-25	▽▽ 1.6-8	▽▽▽ 0.025-1.6	▽▽▽▽ < 0.025
CO-ORDINATED BY				

MACHINING DEVIATIONS FOR NON-TOLERANCED DIMENSIONS

LENGTH IN mm OF SHORTER SIDE OF ANGLES				LENGTH OR DIA	UPTO 6	6-30	30-120	120-315
UPTO 10	10-50	50-120	OVER 120-400					
±1'	±0°-30'	±0°-20'	±0°-10'		±0.1	±0.2	±0.3	±0.5

REV	ZONE	DESCRIPTION	DATE	REMARKS	APPROVED BY

REVISION COLUMN

MED	SIZE A1		
ALL DIMENSIONS ARE IN 'mm' UNLESS OTHERWISE STATED			
SCALE	1:1	DATE	
DRAWN	A.N.N.	30/07/2015	THIRD ANGLE PROJECTION
CHECKED	R.K.		
APPROVED	M.K.G.		

INSTITUTE FOR PLASMA RESEARCH
(LIGO-INDIA)
BHAT, GANDHINAGAR-382 428.

TITLE
CYLINDRICAL PART (DIA 60.5"ID)

REF DRG NO: VH01-001-R1 REV R1

DRG.NO VH01-005-R1 SHEET 06 OF 08

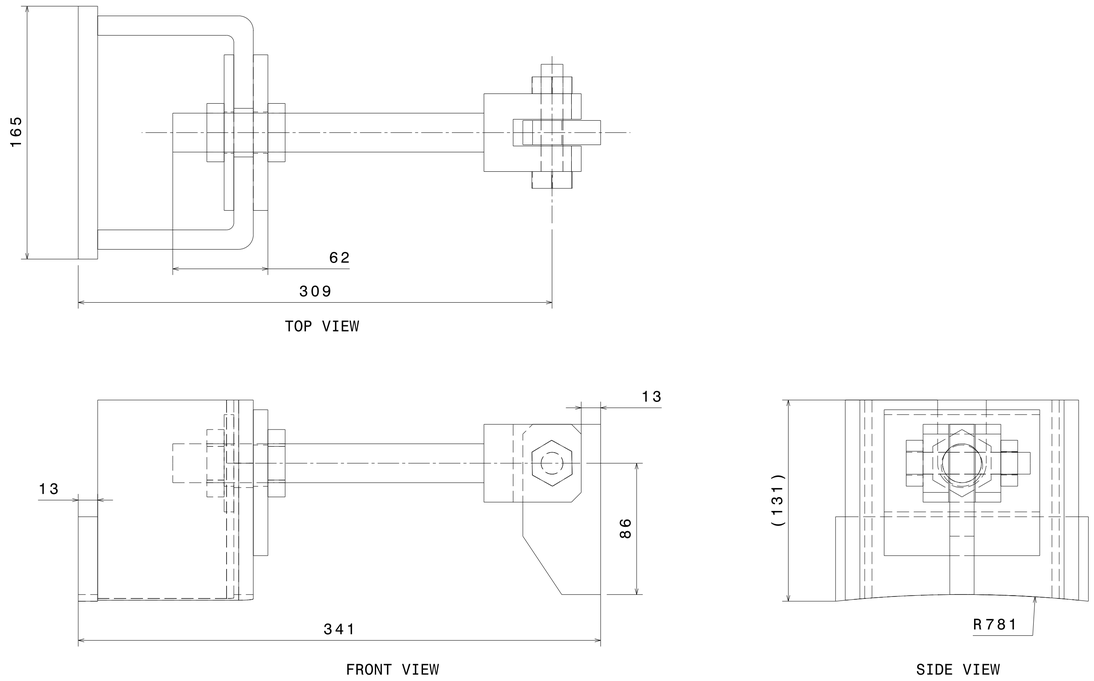

ASSEMBLY DIMENSIONS
SCALE-1:2

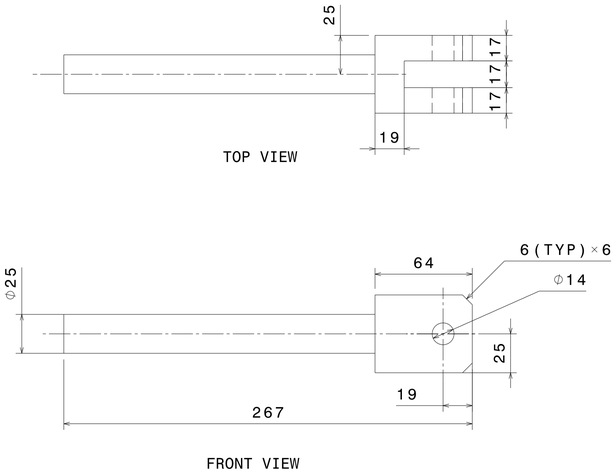

2 ROD
SCALE-1:2

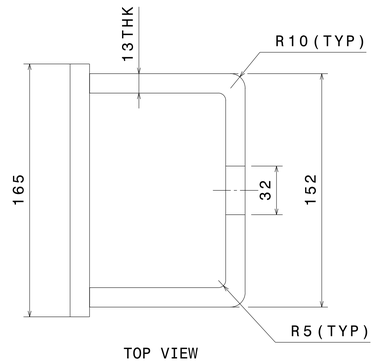

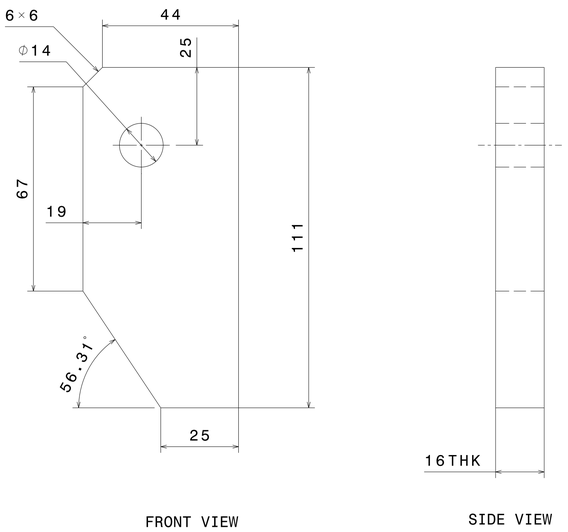

1 PLATE-1
SCALE-1:1

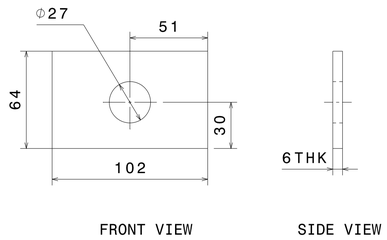

5 PLATE-3
SCALE-1:2

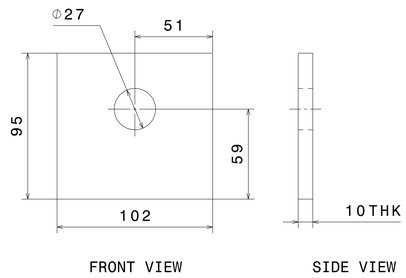

4 PLATE-2
SCALE-1:2

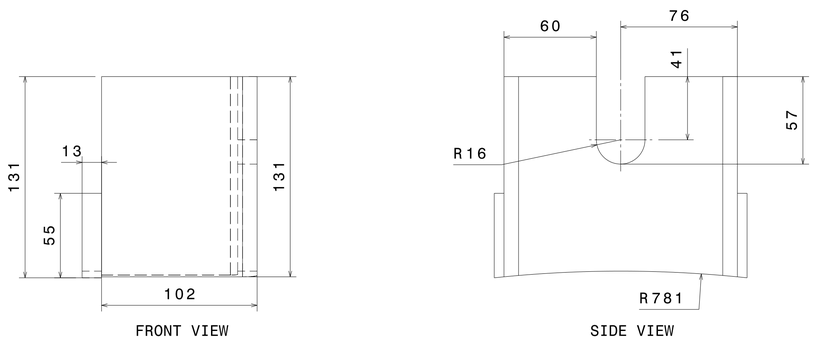

3 BRACKET
SCALE-1:2

MATERIAL:	▽ 8-25	▽▽ 1.6-8	▽▽▽ 0.025-1.6	▽▽▽▽ < 0.025
CO-ORDINATED BY				

MACHINING DEVIATIONS FOR NON-TOLERANCED DIMENSIONS

LENGTH IN mm OF SHORTER SIDE OF ANGLES				LENGTH OR DIA	UPTO 6	6-30	30-120	120-315
UPTO 10	10-50	50-120	OVER 120-400					
±1'	±0°-30'	±0°-20'	±0°-10'		±0.1	±0.2	±0.3	±0.5

REVISION COLUMN					
REV	ZONE	DESCRIPTION	DATE	REMARKS	APPROVED BY

MED	SIZE A1
ALL DIMENSIONS ARE IN 'mm' UNLESS OTHERWISE STATED	
SCALE	AS NOTED
DATE	
DRAWN	A.N.N. 30/07/2015
THIRD ANGLE PROJECTION	
CHECKED	R.K.
APPROVED	M.K.G.

INSTITUTE FOR PLASMA RESEARCH
(LIGO-INDIA)
BHAT, GANDHINAGAR-382 428.

TITLE
CYLINDRICAL PART (DIA 60.5"ID)

REF DRG NO: VH01-001-R1 REV R1

DRG.NO VH01-005-R1 SHEET 07 OF 08

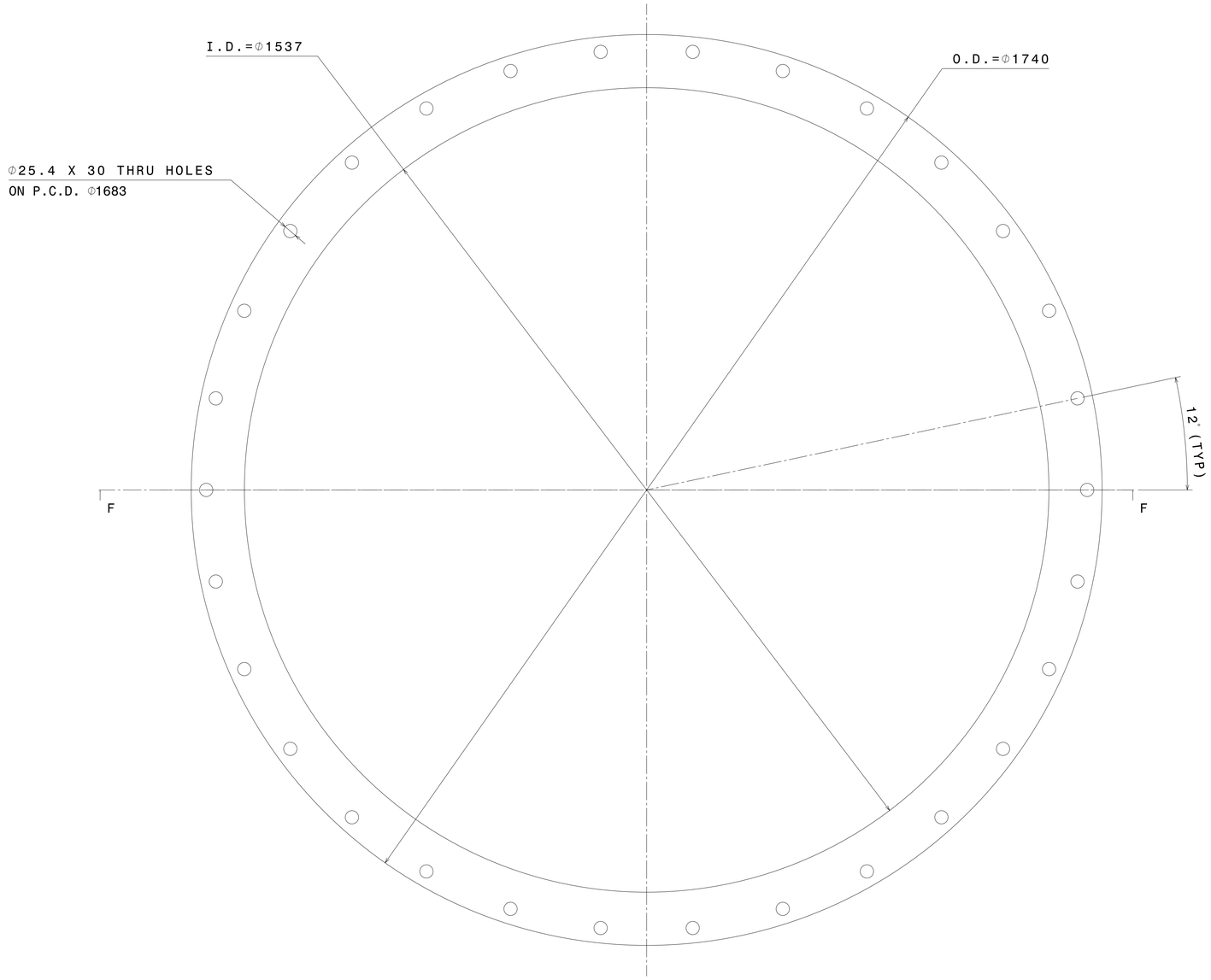

FRONT VIEW

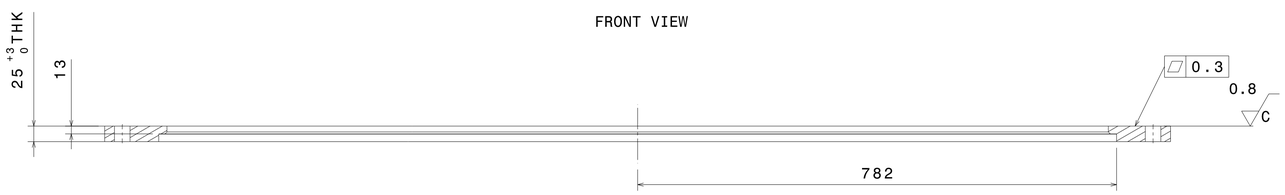

SECTION F-F

9 FLANGE FLAT (60.5"ID)
SCALE 1:5

MATERIAL:	▽ 8-25	▽▽ 1.6-8	▽▽▽ 0.025-1.6	▽▽▽▽ < 0.025	
CO-ORDINATED BY					
MACHINING DEVIATIONS FOR NON-TOLERANCED DIMENSIONS					
LENGTH IN mm OF SHORTER SIDE OF ANGLES					
UPTO 10	10-50	50-120	OVER 120-400		
±1'	±0°-30'	±0°-20'	±0°-10'		

LENGTH OR DIA	UPTO 6	6-30	30-120	120-315
	±0.1	±0.2	±0.3	±0.5

REVISION COLUMN					
REV	ZONE	DESCRIPTION	DATE	REMARKS	APPROVED BY

MED		SIZE A1	
ALL DIMENSIONS ARE IN 'mm' UNLESS OTHERWISE STATED			
SCALE	1:5	DATE	
DRAWN	A.N.N.	30/07/2015	THIRD ANGLE PROJECTION
CHECKED	R.K.		
APPROVED	M.K.G.		

INSTITUTE FOR PLASMA RESEARCH
(LIGO-INDIA)
BHAT, GANDHINAGAR-382 428.

TITLE
CYLINDRICAL PART (DIA 60.5"ID)

REF DRG NO:	VH01-001-R1	REV R1
DRG.NO	VH01-005-R1	SHEET 08 OF 08

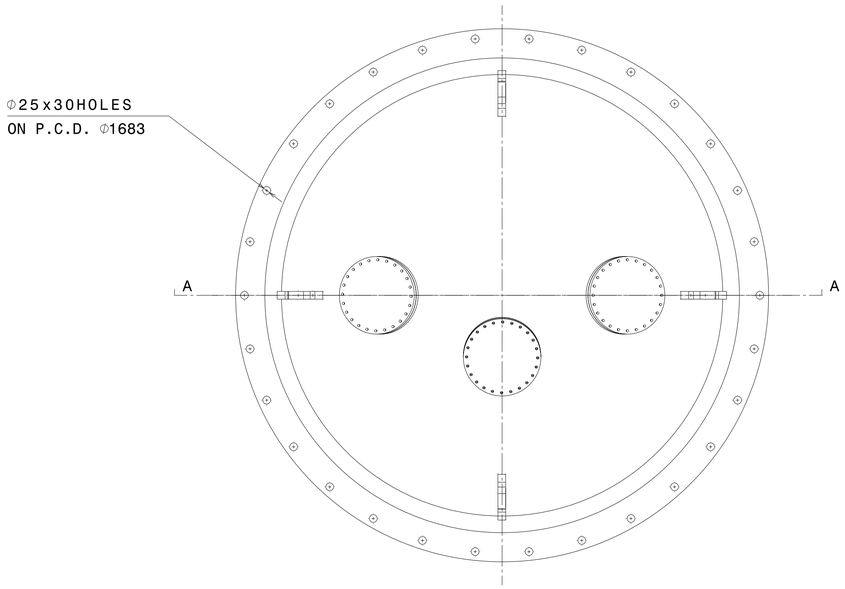

FRONT VIEW

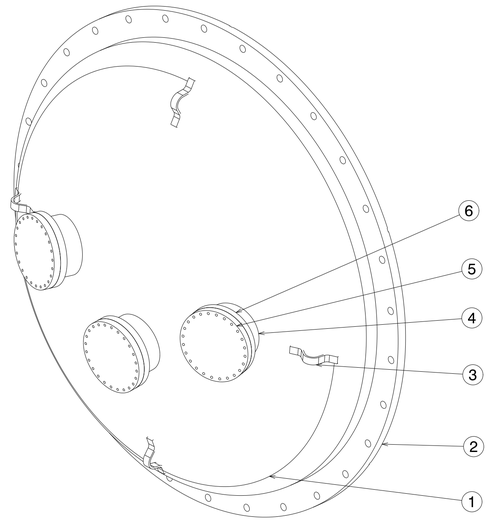

ISOMETRIC VIEW

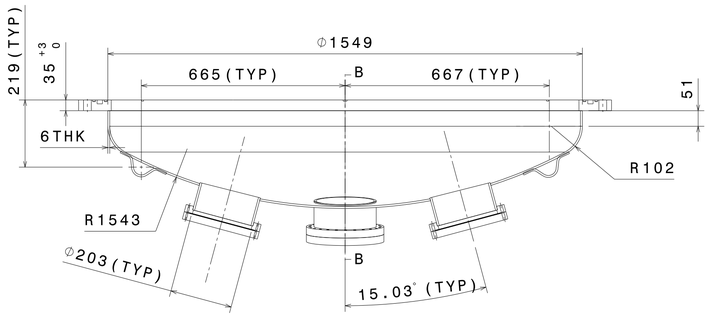

SECTION A-A

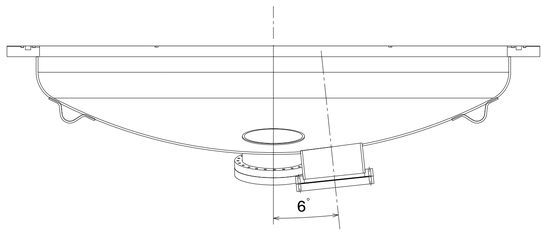

SECTION B-B

PART NO.	QUANTITY	PART NAME	MATERIAL	REF. DWG. NO.	REMARK
6	03	DN 200CF BLANK FLANGE	SS304L	V001-001-R0/SHEET 01	-
5	03	DN 200CF COVER FLANGE	SS304L	V001-001-R0/SHEET 01	-
4	03	PORT NOZZLE	SS304L	VH01-006-R1/SHEET 02	-
3	04	LIFTING LUG	SS304L	VH01-006-R1/SHEET 02	-
2	01	FLANGE GROOVED(60.5"ID)	SS304L	VH01-006-R1/SHEET 03	-
1	01	F & D HEAD	SS304L	VH01-006-R1/SHEET 02	

(5) END COVER SMALL

MATERIAL:	▽ 8-25	▽▽ 1.6-8	▽▽▽ 0.025-1.6	▽▽▽▽ < 0.025
CO-ORDINATED BY				

MACHINING DEVIATIONS FOR NON-TOLERANCED DIMENSIONS

LENGTH IN mm OF SHORTER SIDE OF ANGLES				LENGTH OR DIA	UPTO 6	6-30	30-120	120-315
UPTO 10	10-50	50-120	OVER 120-400					
±1°	±0°-30'	±0°-20'	±0°-10'		±0.1	±0.2	±0.3	±0.5

REVISION COLUMN					
REV	ZONE	DESCRIPTION	DATE	REMARKS	APPROVED BY

MED	SIZE A1
ALL DIMENSIONS ARE IN 'mm' UNLESS OTHERWISE STATED	
SCALE	1:10
DRAWN	A.N.N. 31/07/2015
CHECKED	R.K.
APPROVED	M.K.G.

THIRD ANGLE PROJECTION

INSTITUTE FOR PLASMA RESEARCH
(LIGO-INDIA)
BHAT, GANDHINAGAR-382 428.

TITLE
END COVER SMALL

REF DRG NO: VH01-001-R1 REV R1

DRG.NO VH01-006-R1 SHEET 01 OF 03

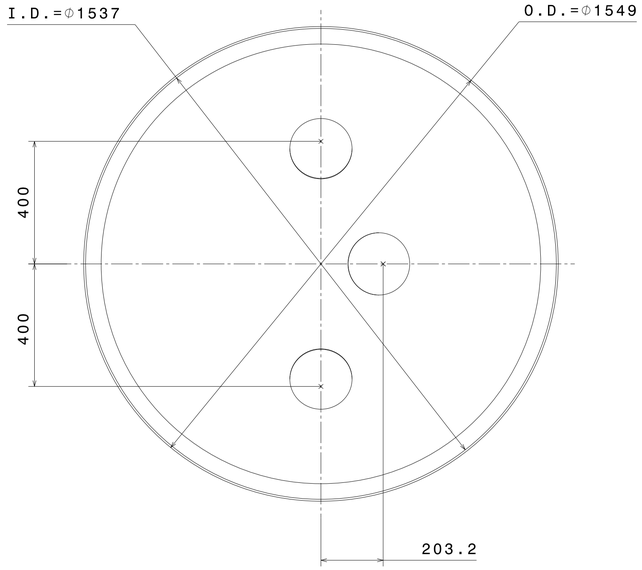

TOP VIEW

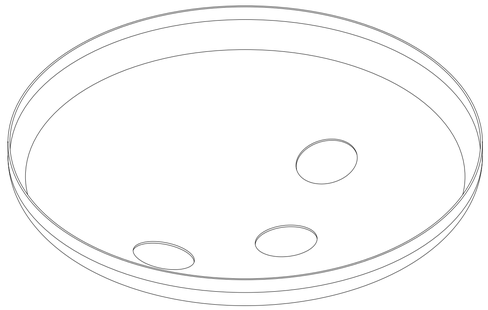

ISOMETRIC VIEW

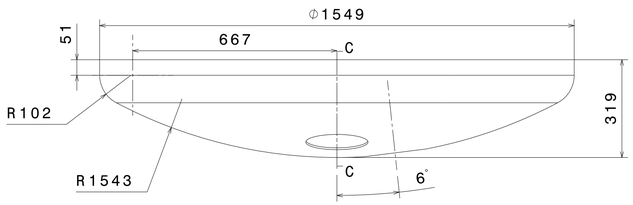

FRONT VIEW

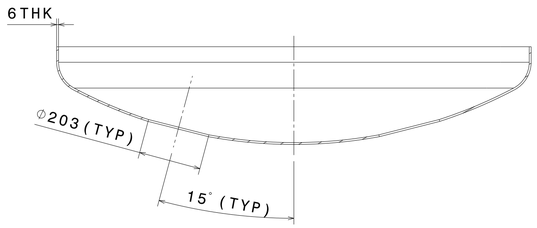

SECTION C-C

1 F & D HEAD
SCALE-1:10

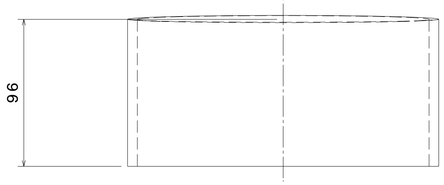

TOP VIEW

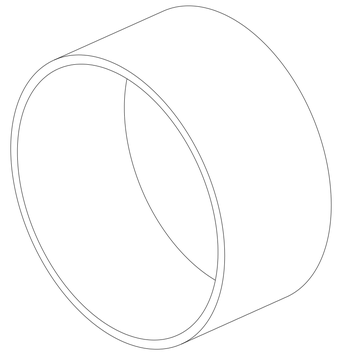

ISOMETRIC VIEW

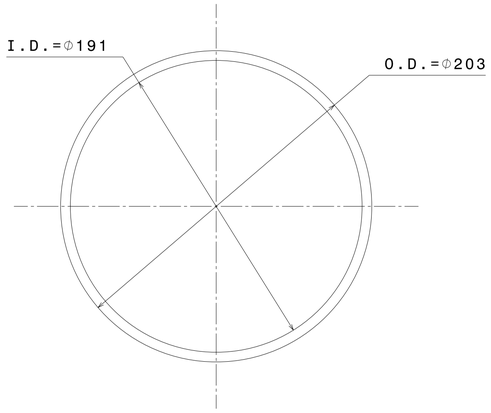

FRONT VIEW

4 PORT NOZZLE
SCALE-1:2

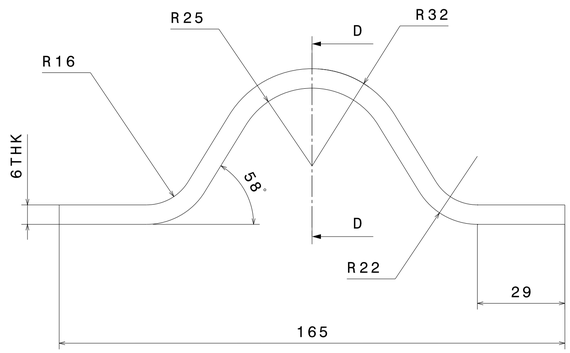

FRONT VIEW

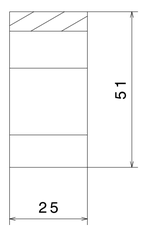

SECTION D-D

3 LIFTING LUG
SCALE-1:1

MATERIAL:	▽ 8-25	▽▽ 1.6-8	▽▽▽ 0.025-1.6	▽▽▽▽ < 0.025	REVISION COLUMN						MED	SIZE A1	INSTITUTE FOR PLASMA RESEARCH (LIGO-INDIA) BHAT, GANDHINAGAR-382 428.						
CO-ORDINATED BY					REV	ZONE	DESCRIPTION	DATE	REMARKS	APPROVED BY	ALL DIMENSIONS ARE IN 'mm' UNLESS OTHERWISE STATED								
MACHINING DEVIATIONS FOR NON-TOLERANCED DIMENSIONS											SCALE	AS NOTED	DATE	THIRD ANGLE PROJECTION	TITLE END COVER SMALL				
LENGTH IN mm OF SHORTER SIDE OF ANGLES				LENGTH OR DIA	UPTO 6	6-30	30-120	120-315			DRAWN	A.N.N.	31/07/2015						
UPTO 10	10-50	50-120	OVER 120-400								CHECKED	R.K.		REF DRG NO: VH01-001-R1				REV R1	
±1°	±0°-30'	±0°-20'	±0°-10'		±0.1	±0.2	±0.3	±0.5			APPROVED	M.K.G.		DRG.NO	VH01-006-R1			SHEET 02 OF 03	

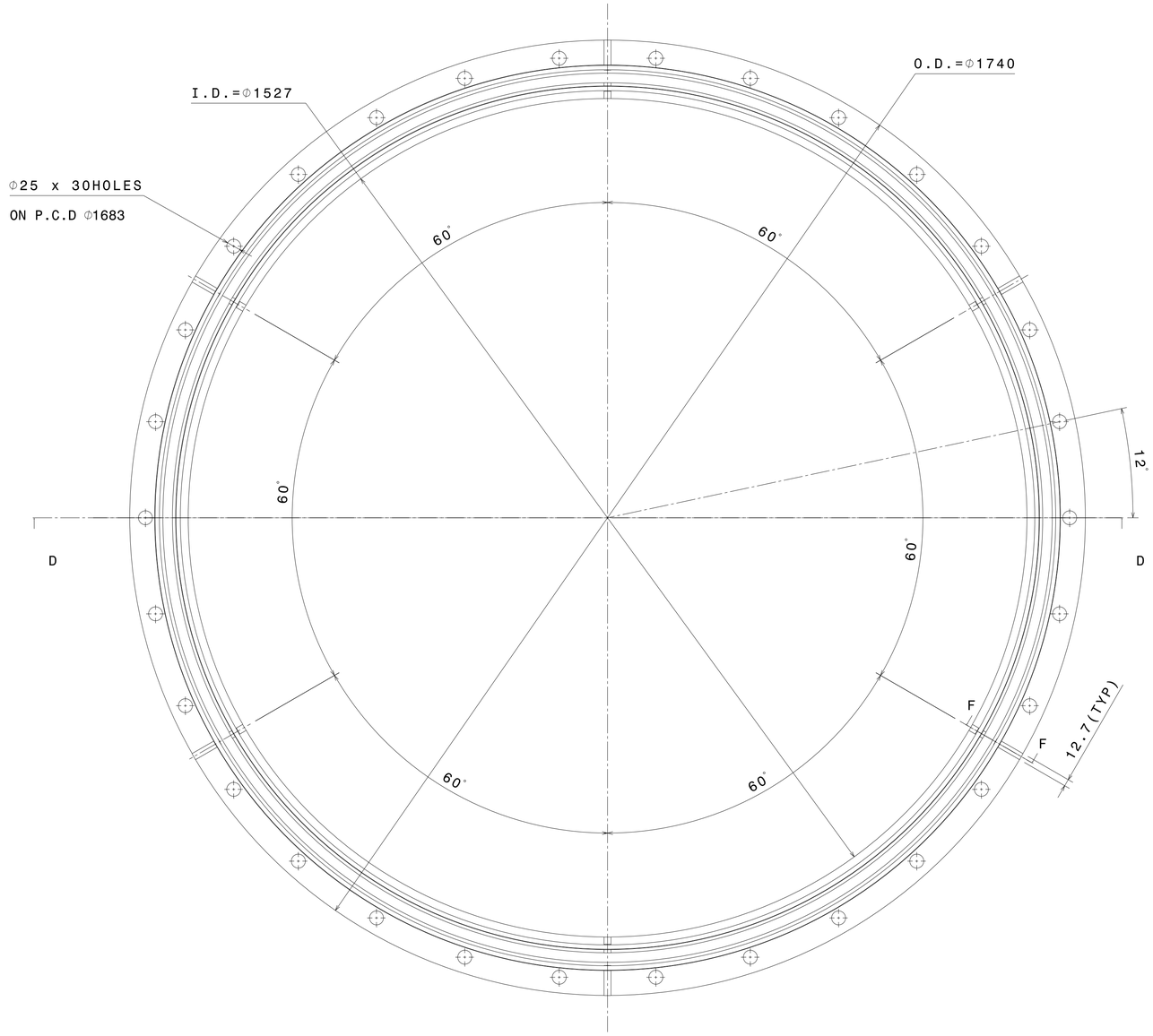

FRONT VIEW

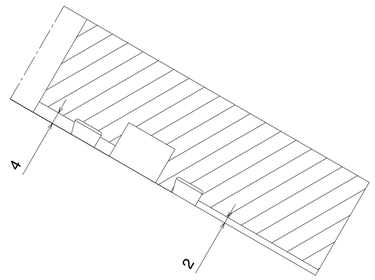

SECTION F-F
SCALE 1:1

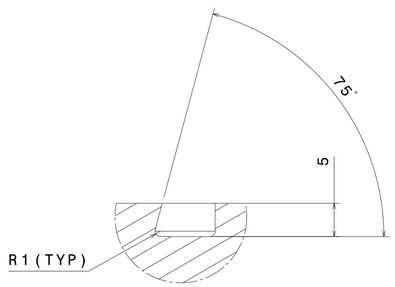

DETAIL VIEW-E
SCALE 2:1

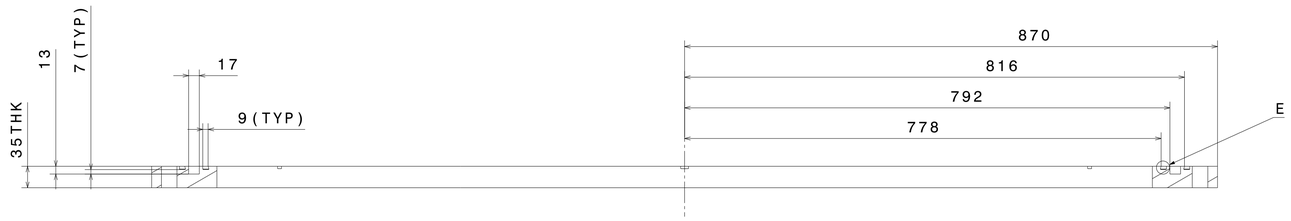

SECTION D-D

ALL THE TOLERANCES AND ROUGHNESS OF THIS FLANGE ARE SIMILAR TO GROOVED FLANGE OF DRAWING NO VH01-004-R1

(2) FLANGE GROOVED (60.5"ID)
SCALE-1:5

MATERIAL:	▽ 8-25	▽▽ 1.6-8	▽▽▽ 0.025-1.6	▽▽▽▽ < 0.025					REVISION COLUMN						MED	SIZE A1	INSTITUTE FOR PLASMA RESEARCH (LIGO-INDIA) BHAT, GANDHINAGAR-382 428.	
CO-ORDINATED BY									REV	ZONE	DESCRIPTION	DATE	REMARKS	APPROVED BY	ALL DIMENSIONS ARE IN 'mm' UNLESS OTHERWISE STATED			
MACHINING DEVIATIONS FOR NON-TOLERANCED DIMENSIONS															SCALE	1:5	DATE	TITLE END COVER SMALL
LENGTH IN mm OF SHORTER SIDE OF ANGLES					LENGTH OR DIA	UPTO 6	6-30	30-120	120-315						DRAWN	A.N.N.	31/07/2015	THIRD ANGLE PROJECTION
UPTO 10	10-50	50-120	OVER 120-400												CHECKED	R.K.		REF DRG NO: VH01-001-R1 REV R1
±1'	±0°-30'	±0°-20'	±0°-10'			±0.1	±0.2	±0.3	±0.5						APPROVED	M.K.G.		DRG.NO VH01-006-R1 SHEET 03 OF 03

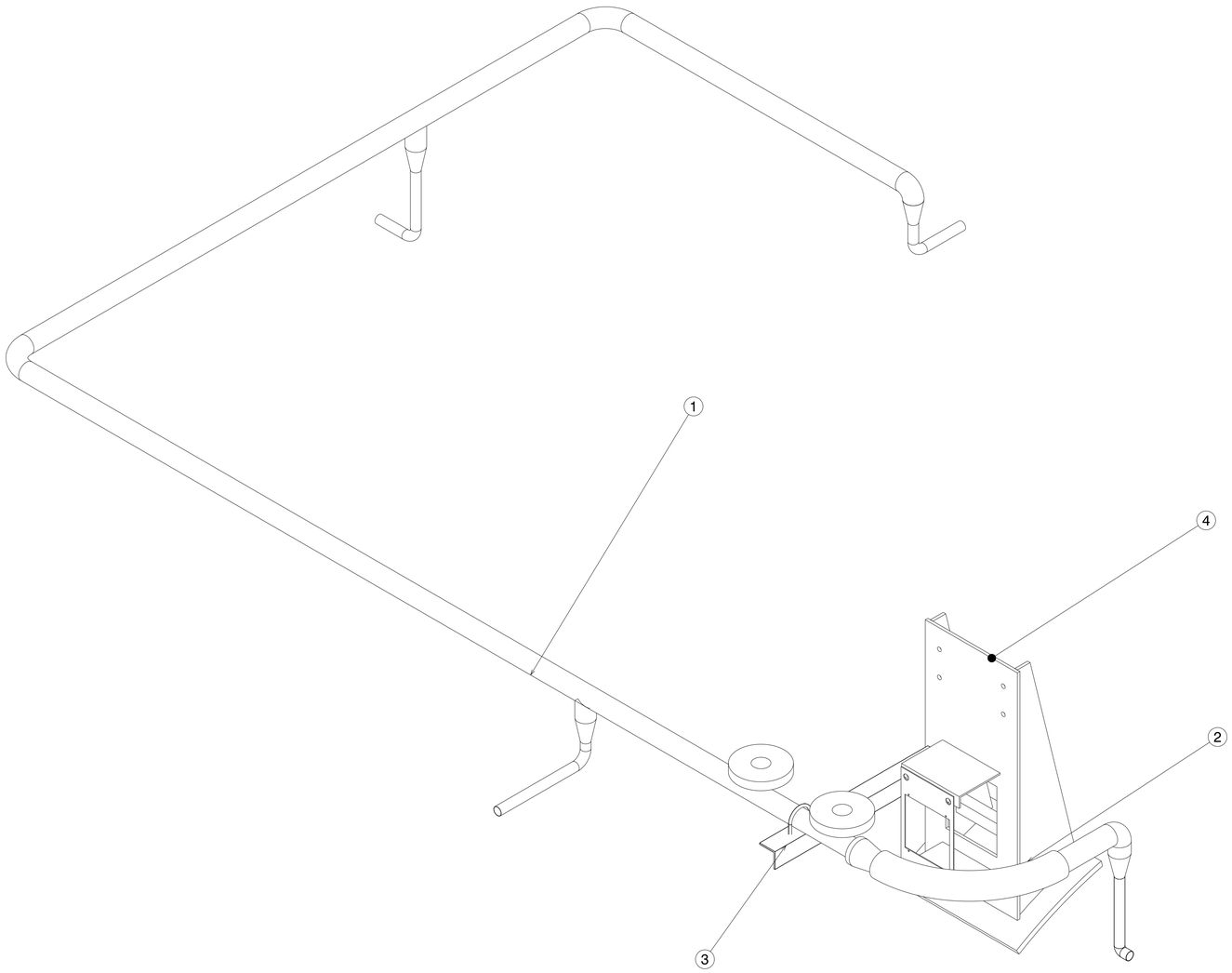

6 ANNULUS TUBING ASSEMBLY

PART NO.	QUANTITY	PART NAME	MATERIAL	REF. DWG. NO.	REMARK
4	01	75 I/S ION PUMP SUPPORT	SS304L	VH01-007-R1/SHEET 03/04	-
3	01	ANNULUS TUBE SHIPPING SUPPORT	SS304L	VH01-007-R1/SHEET 03	-
2	01	ANNULUS FLEX HOSE	SS304L	VH01-007-R1/SHEET 02	-
1	01	TUBING ASSEMBLY	SS304L	VH01-007-R1/SHEET 02	-

MATERIAL: ▽ 8-25 ▽▽ 1.6-8 ▽▽▽ 0.025-1.6 ▽▽▽▽ < 0.025

CO-ORDINATED BY

MACHINING DEVIATIONS FOR NON-TOLERANCED DIMENSIONS

LENGTH IN mm OF SHORTER SIDE OF ANGLES				LENGTH OR DIA	UPTO 6	6-30	30-120	120-315
UPTO 10	10-50	50-120	OVER 120-400					
±1'	±0°-30'	±0°-20'	±0°-10'		±0.1	±0.2	±0.3	±0.5

REVISION COLUMN

REV	ZONE	DESCRIPTION	DATE	REMARKS	APPROVED BY

MED — SIZE A1

ALL DIMENSIONS ARE IN 'mm' UNLESS OTHERWISE STATED

SCALE 1:10 — DATE

THIRD ANGLE PROJECTION

DRAWN A.N.N. 01/08/2015

CHECKED R.K.

APPROVED M.K.G.

INSTITUTE FOR PLASMA RESEARCH (LIGO-INDIA)
BHAT, GANDHINAGAR-382 428.

TITLE ANNULUS TUBING ASSEMBLY

REF DRG NO: VH01-001-R1 — REV R1

DRG.NO VH01-007-R1 — SHEET 01 OF 04

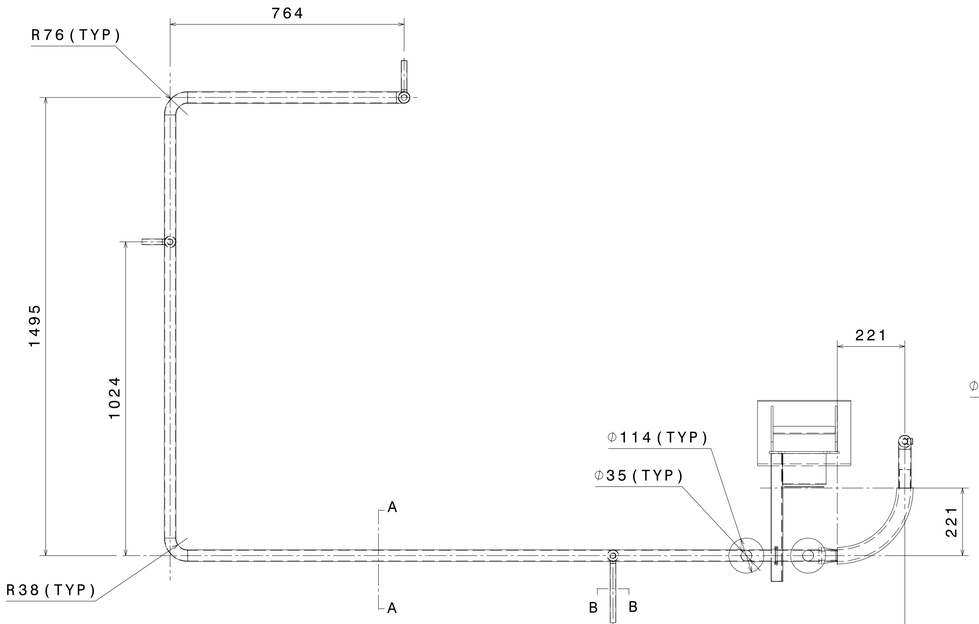

TOP VIEW

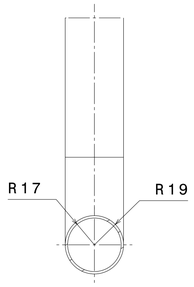

SECTION A-A
SCALE-1:2

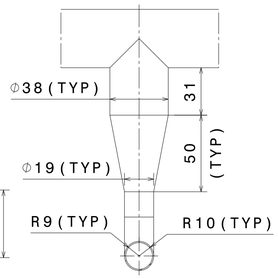

SECTION B-B
SCALE-1:2

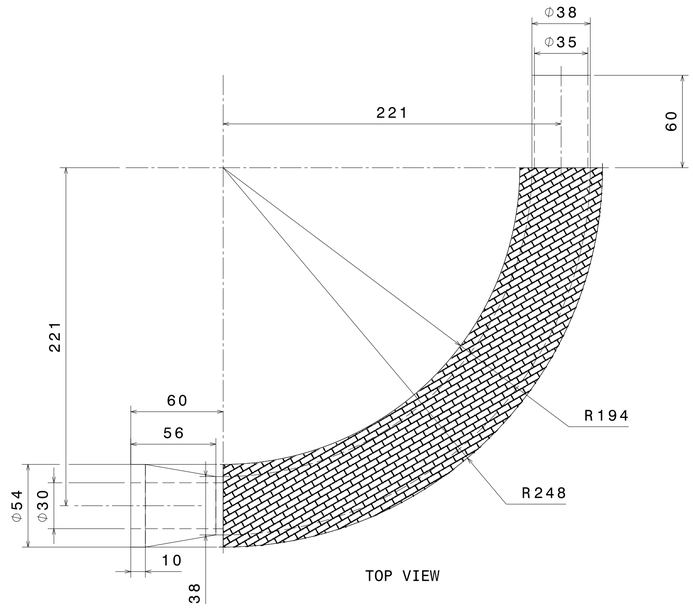

TOP VIEW

2 ANNULUS FLEX HOSE
SCALE-1:2

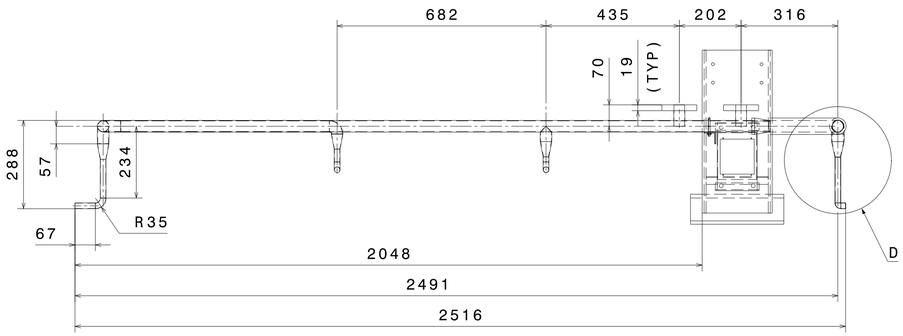

FRONT VIEW

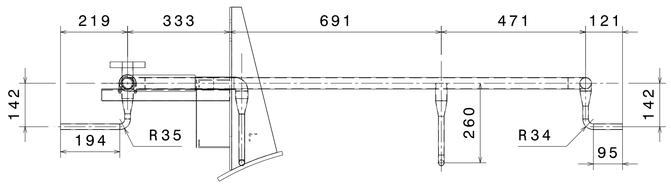

SIDE VIEW

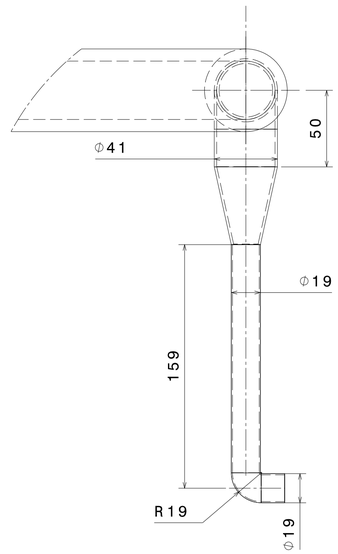

DETAIL VIEW-D
SCALE-1:2

1 TUBING ASSEMBLY
SCALE-1:10

MATERIAL:	▽ 8-25	▽▽ 1.6-8	▽▽▽ 0.025-1.6	▽▽▽▽ < 0.025
CO-ORDINATED BY				

MACHINING DEVIATIONS FOR NON-TOLERANCED DIMENSIONS

LENGTH IN mm OF SHORTER SIDE OF ANGLES				LENGTH OR DIA	UPTO 6	6-30	30-120	120-315
UPTO 10	10-50	50-120	OVER 120-400					
±1'	±0°-30'	±0°-20'	±0°-10'		±0.1	±0.2	±0.3	±0.5

REVISION COLUMN					
REV	ZONE	DESCRIPTION	DATE	REMARKS	APPROVED BY

MED	SIZE A1
ALL DIMENSIONS ARE IN 'mm' UNLESS OTHERWISE STATED	
SCALE	AS NOTED
DRAWN	A.N.N. 01/08/2015
CHECKED	R.K.
APPROVED	M.K.G.

THIRD ANGLE PROJECTION

INSTITUTE FOR PLASMA RESEARCH
(LIGO-INDIA)
BHAT, GANDHINAGAR-382 428.

TITLE
ANNULUS TUBING ASSEMBLY

REF DRG NO: VH01-001-R1 REV R1

DRG.NO VH01-007-R1 SHEET 02 OF 04

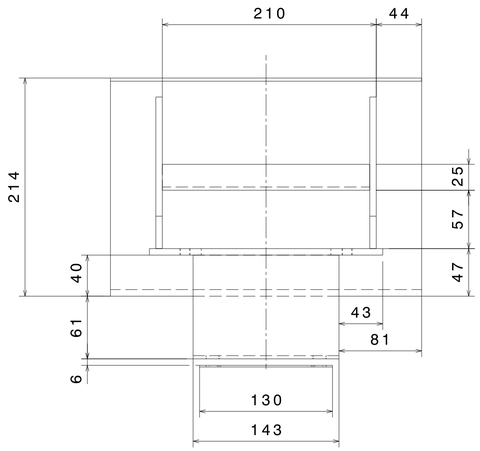

TOP VIEW

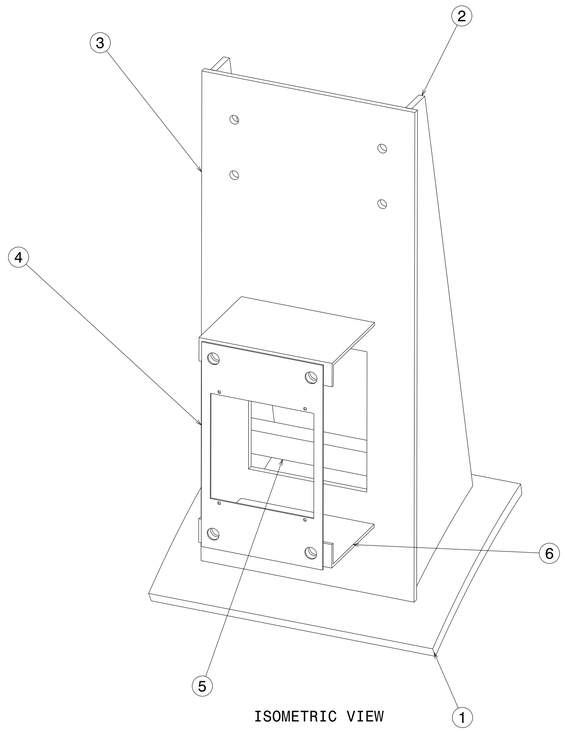

ISOMETRIC VIEW

TOP VIEW

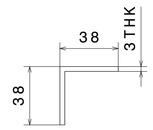

SECTION C-C

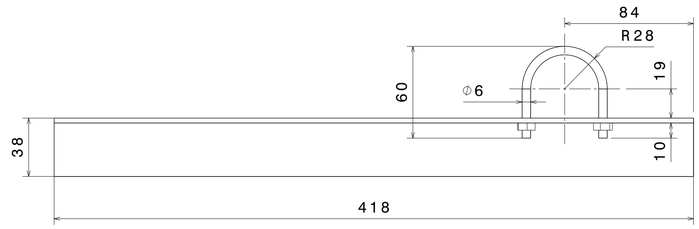

FRONT VIEW

③ ANNULUS TUBE SHIPPING SUPPORT
SCALE-1:2

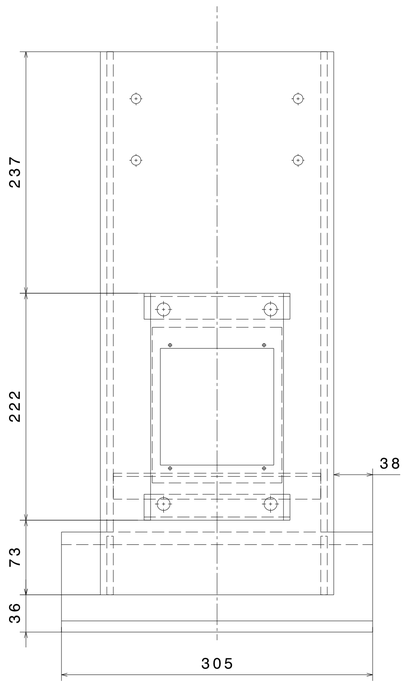

FRONT VIEW

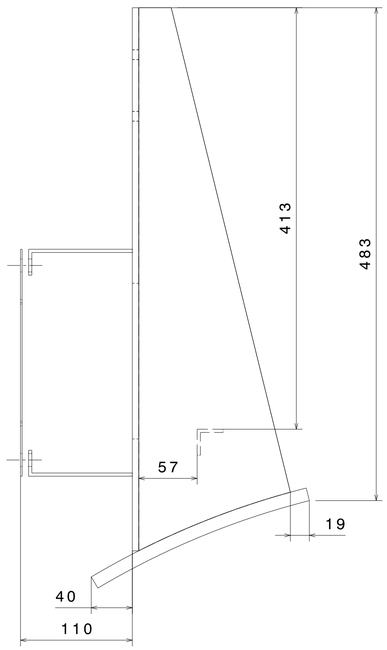

SIDE VIEW

④ 75 I/S ION PUMP SUPPORT
SCALE-1:3

PART NO.	QUANTITY	PART NAME	MATERIAL	REF. DWG. NO.	REMARK
6	02	L-PLATE	SS304L	VH01-007-R1/SHEET 04	-
5	01	L-CHANNEL	SS304L	VH01-007-R1/SHEET 04	-
4	01	PLATE-4	SS304L	VH01-007-R1/SHEET 04	-
3	01	PLATE-3	SS304L	VH01-007-R1/SHEET 04	-
2	02	PLATE-2	SS304L	VH01-007-R1/SHEET 04	-
1	01	PLATE-1	SS304L	VH01-007-R1/SHEET 04	-

MATERIAL:	▽ 8-25	▽▽ 1.6-8	▽▽▽ 0.025-1.6	▽▽▽▽ < 0.025
CO-ORDINATED BY				

MACHINING DEVIATIONS FOR NON-TOLERANCED DIMENSIONS

LENGTH IN mm OF SHORTER SIDE OF ANGLES				LENGTH OR DIA	UPTO 6	6-30	30-120	120-315
UPTO 10	10-50	50-120	OVER 120-400					
±1'	±0°-30'	±0°-20'	±0°-10'		±0.1	±0.2	±0.3	±0.5

REV	ZONE	DESCRIPTION	DATE	REMARKS	APPROVED BY

REVISION COLUMN

MED	SIZE A1		
ALL DIMENSIONS ARE IN 'mm' UNLESS OTHERWISE STATED			
SCALE	1:5	DATE	
DRAWN	A.N.N.	01/08/2015	THIRD ANGLE PROJECTION
CHECKED	R.K.		
APPROVED	M.K.G.		

INSTITUTE FOR PLASMA RESEARCH
(LIGO-INDIA)
BHAT, GANDHINAGAR-382 428.

TITLE
ANNULUS TUBING ASSEMBLY

REF DRG NO: VH01-001-R1 REV R1

DRG.NO VH01-007-R1 SHEET 03 OF 04

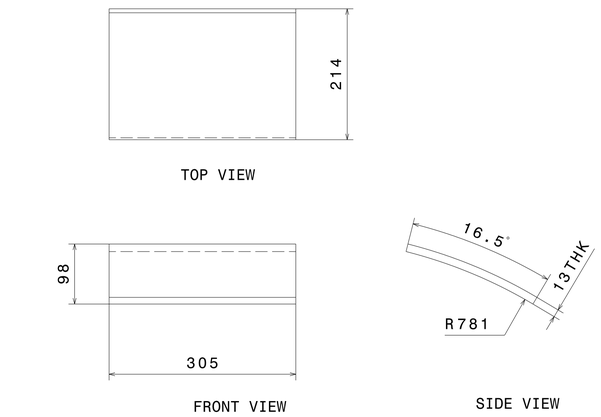

1 PLATE-1
SCALE-1:5

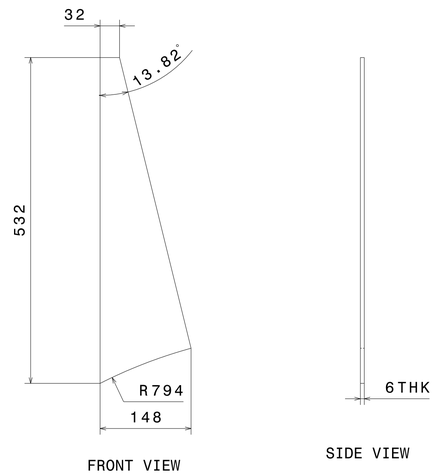

2 PLATE-2
SCALE-1:5

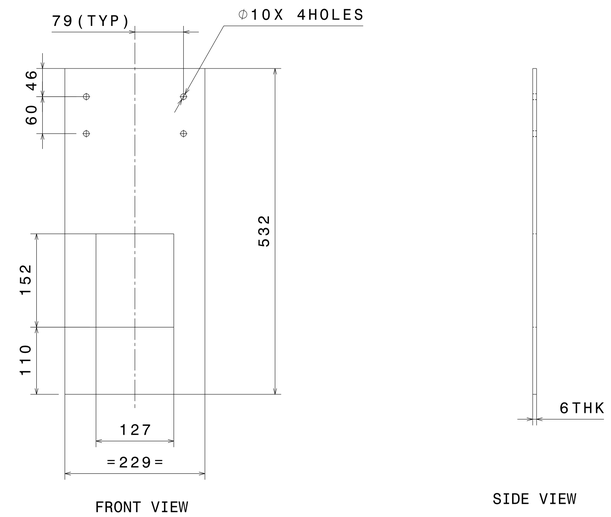

3 PLATE-3
SCALE-1:5

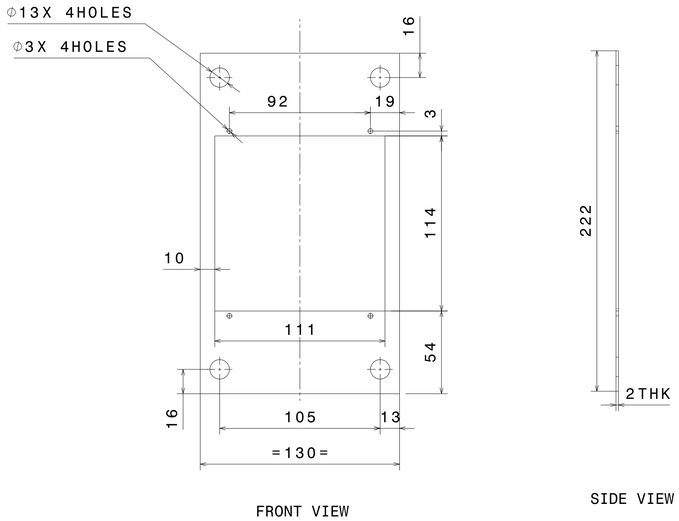

4 PLATE-4
SCALE-1:2

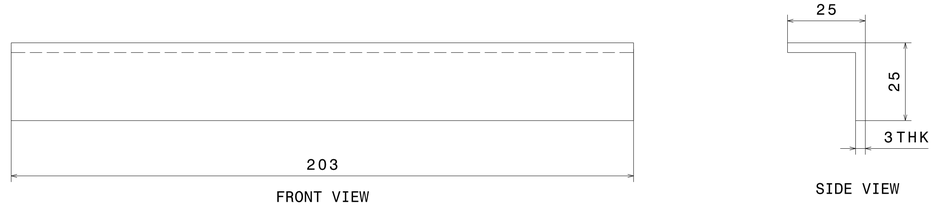

5 L-CHANNEL
SCALE-1:1

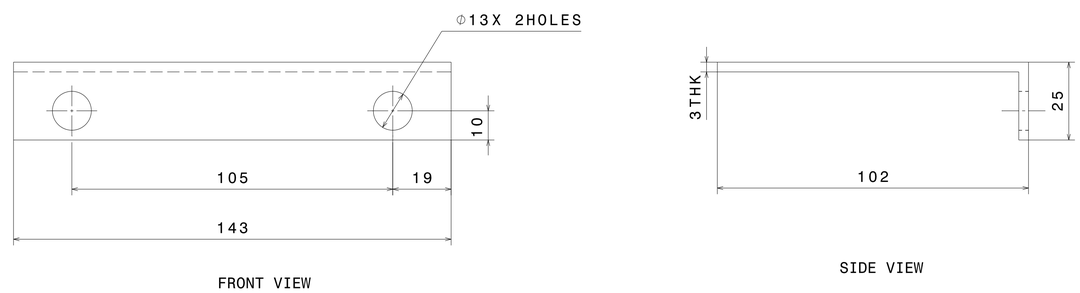

6 L-PLATE
SCALE-1:1

MATERIAL:	▽ 8-25	▽▽ 1.6-8	▽▽▽ 0.025-1.6	▽▽▽▽ < 0.025
CO-ORDINATED BY				

MACHINING DEVIATIONS FOR NON-TOLERANCED DIMENSIONS

LENGTH IN mm OF SHORTER SIDE OF ANGLES				LENGTH OR DIA	UPTO 6	6-30	30-120	120-315
UPTO 10	10-50	50-120	OVER 120-400					
±1'	±0°-30'	±0°-20'	±0°-10'		±0.1	±0.2	±0.3	±0.5

REVISION COLUMN

REV	ZONE	DESCRIPTION	DATE	REMARKS	APPROVED BY

MED	SIZE A1
ALL DIMENSIONS ARE IN 'mm' UNLESS OTHERWISE STATED	
SCALE	AS NOTED
DATE	
DRAWN	A.N.N. 01/08/2015
CHECKED	R.K.
APPROVED	M.K.G.

THIRD ANGLE PROJECTION

INSTITUTE FOR PLASMA RESEARCH
(LIGO-INDIA)
BHAT, GANDHINAGAR-382 428.

TITLE
ANNULUS TUBING ASSEMBLY

REF DRG NO: VH01-001-R1 REV R1

DRG.NO VH01-007-R1 SHEET 04 OF 04